# PORTOLA VALLEY RANCH

# DESIGN GUIDELINES

**Adopted May 21, 2025**

# Quick Guide

**This introduction provides a broad overview to help orient you to your obligations in the preparation and submission of an application for projects that affect the exterior of your home or significant landscaping plans. We hope that this introduction will help focus your attention on those sections of the Design Guidelines most pertinent to your project.**

## Background and Rationale

The founders of Portola Valley Ranch carefully planned and designed the homes to integrate with the surroundings, thus ensuring not only that the native habitat abutting vast Open Space preserves was maintained, but also that the exterior of each home was in harmony with the natural environment. The landscaping was also zoned to increase the areas retained in a natural state and to enhance the visual experience of the development by harmonizing with surrounding vegetation patterns.

To preserve the original vision of the founders, Design Guidelines and CC&Rs have been adopted by all homeowners to ensure that homes not only harmonize with each other but also with the natural surroundings. In addition, these documents help to preserve every resident's view corridors and privacy.

As a result of being in the zone of transition between unoccupied land and human development, the Ranch has been designated a Wildland-Urban Interface - a term commonly used for areas that experience wildfires. In addition, the Ranch is certified as a Firewise Community that involves implementing certain Firewise practices aimed at reducing wildfire risks. These Design Guidelines have been developed with good Firewise practices in mind.

## Design Committee Application and Review Process

If your plans involve significant landscaping or certain exterior modifications to your home, please be aware that an application may need to be submitted to the Design Committee for review and approval prior to initiating your project. Please check the Guidelines or check with a Design Committee member to determine if an application is required. Your project may also require Town ASCC review prior to applying for a building permit. The Town requires a letter from the Ranch indicating Design Committee approval for your plans, so please take this into account as you plan your project.

1. **Design Guidelines**
    a. Make sure you have the most recent version by calling the Ranch Office or checking the Ranch website: https://portolavrca.pilera.com/page/design
    b. Identify and review those items in the Design Guidelines that are relevant to your proposed plans **while** you are developing your plans so you don't encounter any surprises or delays! The Design Guidelines are available on the Ranch website in a form readily searchable by key words to ensure that you identify all applicable portions of the Guidelines that may pertain to your project. For example, if you are planning to modify your deck, you can search on "deck" and find all applicable sections in the Guidelines.
    c. Be sure that your architect, contractor and designer are all aware of these Guidelines.
2. **Discuss with your neighbors**
    a. It may be helpful for you to consider sharing your proposed plans with your neighbors **before** submitting an application to the Design Committee to discover any significant concerns early in the process and to encourage neighborliness!

3. **Submit Design Committee Application**
    a. Submit an application by the 15th of the month for review by the Committee at its monthly meeting.
    b. Be sure to review the Design Guidelines and the application form to ensure that all required plot plans, elevation drawings, dimensions, specifications, etc. are provided so that your application is not delayed during the review process.
    c. Be aware that your project may require staking out the boundaries and heights of your proposed project. If staining or painting is involved, samples must be painted and labeled with the location identified in your application. These actions must be completed at least 1 week prior to the Design Committee meeting.
    d. Attend the Design Committee meeting when your application will be reviewed to answer questions and to work with the Committee to resolve any potential concerns that may arise. The Committee strives to work closely with homeowners to help achieve your desired goal while upholding the spirit of the Design Guidelines and the vision of the Ranch founders.
4. **Town ASCC**
    a. After you have received Design Committee approval, be aware that you may still need to obtain approval from the Town of Portola Valley's ASCC (Architectural and Site Control Commission) and/or obtain a building permit (check with the Town). If the ASCC requires any modifications, you must return to the Design Committee to receive approval for those changes by submitting a mid-construction change application.
5. **Construction and Completion**
    a. The Ranch requires that you provide your contractor with a set of "Rules for Contractors" which can be found on the Ranch website.
    b. Design Committee approval extends for 24 months from the date of approval. If you have not completed your project within 24 months of approval, you must apply for and obtain approval for an extension, or your original approval will be considered expired and a new application required.
    c. Upon completion, you are requested to notify the Ranch Office so the Design Committee may complete a final inspection. Please note that if you made any mid-construction changes that did not receive Design Committee approval, your final letter could indicate that you need to make changes to bring your project into compliance.

# Table of Contents

**Glossary** ..... **12**

**Section 1—Purpose, Basis, Scope, Modification and Enforcement of Design Guidelines** ..... **18**

1.1—What Are They and Why Have Design Guidelines? ..... 18

1.1.1 Town Requirements ..... 18

1.1.2 Value to Homeowner ..... 18

1.2—What Is the Basis for the Design Guidelines? ..... 18

1.2.1 Town Basis ..... 18

1.2.2 Relationship to CC&Rs ..... 18

1.2.3 Conformance to PUD Statements ..... 19

1.2.4 What Property Is Covered by the Design Guidelines ..... 19

1.3—Purpose and Objectives of Design Guidelines ..... 19

1.4—Undeveloped Lots, Tear Downs and Destruction Replacements ..... 20

1.4.1 Undeveloped Lots ..... 20

1.4.2 Tear Downs and Rebuilds ..... 20

1.5—What Are the Design Guidelines? ..... 20

1.6—How Are the Design Guidelines Prepared and Modified? ..... 21

1.7—How Are These Design Guidelines Used and Enforced? ..... 21

1.7.1 Homeowner Use ..... 21

1.7.2 Design Committee Use ..... 22

1.7.3 Board of Director Use ..... 22

1.7.4 Enforcement of the Design Guidelines ..... 22

1.7.5 Use by the Town ..... 22

**Section 2—Design Application & Review Process** ..... **23**

2.1—Background ..... 23

2.2—The Application Process ..... 23

2.2.1 Standard Application ..... 23

2.2.2 Fast Track Applications ..... 24

2.3—Design Committee Procedures ..... 24

2.3.1 Design Committee Procedures Manual ..... 24

2.3.2 Design Committee Process ..... 24

2.3.3 Design Committee Approval or Denial ..... 24

2.3.4 Mid-Construction Change to an Approved Application ..... 25

2.3.5 Approval Expiration and Final Review ..... 25

2.4—Notifications ..... 25

Exhibit 2.3.2—The Design Committee and Town Review Process ..... 26

Exhibit 2.3.2—Step 7—Stake Out Changes ..... 29
**Section 3—Landscaping and Outdoor Structures (including Lighting, Antennae and Solar Panels) ..... 30**
3.1—Landscaping ..... 30
3.1.1 Concept Statement ..... 30
3.1.2 Fire Safety and Landscaping ..... 30
3.1.3 Landscaping on Homeowner Lots ..... 32
3.1.3.1 Approval Process ..... 32
3.1.3.2 Homeowner Lots ..... 33
3.1.3.3 Maintenance ..... 34
3.1.3.4 Planting Trees ..... 34
3.1.3.5 Tree Removal (live/dead) or Topping ..... 34
3.1.3.6 Preservation of Significant Views and View Corridors ..... 35
3.1.3.7 Restoration of A Significant View ..... 35
3.1.3.8 Preservation of View Corridors ..... 35
3.1.3.9 Irrigation Systems ..... 35
3.1.3.10 Mulching Guidelines ..... 35
3.1.3.11 Use of Rocks and Boulders in Landscaping ..... 35
3.1.3.12 Dry Creek Beds ..... 36
3.1.3.13 Landscape Pathways and Steps ..... 36
3.1.3.14 Containers ..... 36
3.1.3.15 Planting Structures ..... 37
3.1.3.16 Ornamental Statuary and Benches ..... 37
3.1.3.17 Personal Agriculture ..... 37
3.1.3.18 Cages Around Plants ..... 37
3.1.4 Landscaping and Maintenance of Association Property ..... 37
Exhibit 3.1.1A—Approved Plant List ..... 39
Exhibit 3.1.1B—Invasive Plant Guidelines ..... 40
Exhibit 3.1.3.5—Significant Tree Removal ..... 42
Exhibit 3.1.3.6—Preservation of Significant Views and View Corridors ..... 43
Exhibit 3.1.3.10—Mulching Guidelines ..... 45
Exhibit 3.1.3.11—Landscaping in the 0–5’ Zone ..... 47
Exhibit 3.1.3.14A—Example: Redwood Rounds for Pathways ..... 50
Exhibit 3.1.3.14B—Example: Timbers for Pathways ..... 51
Exhibit 3.1.3.15A—Large Wood Planting Structure ..... 52
Exhibit 3.1.3.15B—Small Wood Planting Structure ..... 53
3.2—Exterior Colors ..... 54

3.2.1 General Design Concept ..... 54
3.2.1.1 Acceptable Colors and Finish ..... 54
3.2.1.2 Variety of Colors ..... 54
3.2.1.3 Stain/Paint Types ..... 54
3.2.2 Approvals Required ..... 54
3.2.2.1 Sample ..... 54
3.2.2.2 Design Committee Approvals ..... 55
3.2.2.3 Town and Design Committee Approved Colors ..... 55
3.2.3 Guide to Approvable Materials, Reflectivity, Color ..... 55
Exhibit 3.2.3—Approved Exterior Colors ..... 61
3.3—House Additions and Increasing Footprints ..... 68
3.3.1 Concept Statement ..... 68
3.3.2 Building Envelope Lines and Non-living Lines ..... 68
3.3.2.1 Building Envelopes ..... 68
3.3.2.2 Restricted Application of Town Averaging Provision ..... 68
3.3.2.3 Exceptions ..... 69
3.3.2.4 General Impact of Site Design ..... 69
3.3.2.5 E-2 Incursions ..... 69
3.3.2.6 Adjustment to Building Envelope and Non-living Lines ..... 69
3.3.3 Conformance to Existing Structure ..... 69
3.3.4 Conformance to Neighborhood ..... 69
3.3.4.1 Neighborhood Integrity ..... 69
3.3.4.2 Preservation of Views ..... 69
3.3.4.3 Height Considerations ..... 70
3.3.4.4 Proximity to Street and Other Structures ..... 70
3.3.4.5 Bulk & Mass Considerations ..... 70
3.3.4.6 Privacy of Adjacent Neighbors ..... 70
3.3.5 Second Story Additions ..... 70
3.3.5.1 General Considerations ..... 70
3.3.5.2 Flat Lot ..... 71
3.3.5.3 Uphill Lot ..... 71
3.3.5.4 Downhill Lot ..... 71
3.3.5.5 Ridge Line Lot ..... 71
3.3.6 Existing Carports and Carport Enclosures ..... 71
3.3.7 Accessory Dwelling Unit (ADU) and Junior Accessory Dwelling Unit (JADU) ..... 71
3.3.7.1 Background ..... 71

3.3.7.2 PVR Application Submission Requirements ..... 72
Exhibit 3.3.2.2A—Applying Town Averaging Provision ..... 73
Exhibit 3.3.2.2B—Town Averaging Provision—Building Envelope ..... 74
Exhibit 3.3.2.2C—Implementation of 32 Ft. Rule ..... 78
3.4—Exterior Wall and Roof Treatments ..... 79
3.4.1 Concept Statement ..... 79
3.4.2 General Design Concepts ..... 79
3.4.2.1 Exterior Walls ..... 79
3.4.2.2 Roofs and Fascia ..... 79
3.4.2.3 Exterior Doors ..... 80
3.4.2.4 Garage Doors ..... 80
3.4.2.5 Windows ..... 80
3.4.2.6 Exterior Window and Door Shades ..... 80
3.4.2.7 Skylights ..... 81
3.4.2.8 Sun Rooms ..... 81
3.4.3 Approvals Required ..... 81
Exhibit 3.4.1—Typical Building Components ..... 82
Exhibit 3.4.2.2—Example: Flat Roof Fascia ..... 84
Exhibit 3.4.2.2—Example: Sloped Roof Fascia ..... 85
Exhibit 3.4.2.6—Standard Detail—Solar Screen ..... 86
3.5—Decks & Patios and Related Railings and Trellises ..... 88
3.5.1 Concept Statement ..... 88
3.5.1.1 Decks ..... 88
3.5.1.2 Patios ..... 88
3.5.1.3 Visual Impacts ..... 88
3.5.2 General Design Concepts ..... 88
3.5.2.1 Deck and Patio ..... 88
3.5.2.2 Deck Railings ..... 89
3.5.2.3 Deck Trellises ..... 89
3.5.2.4 Other Trellises ..... 89
3.5.2.5 Under Deck or Cantilevered Structures ..... 89
3.5.2.6 Deck Supports ..... 90
3.5.2.7 Deck Stairs ..... 90
3.5.2.8 Hardscape, Pathways, Steps, and Driveways ..... 90
3.5.3 Design Details ..... 90
3.5.3.1 Deck Fascia Boards ..... 91

3.5.3.2 Railing and Trellis Structural Member Details ..... 91
3.5.3.3 Trellis Details ..... 91
3.5.3.4 Deck Support ..... 91
3.5.3.5 Siting of Decks and Patios ..... 91
3.5.4 Materials ..... 91
3.5.4.1 Deck and Patio Structure Materials ..... 91
3.5.4.2 Use of Metal Members ..... 91
3.5.4.3 Deck Railings ..... 92
3.5.5 Approvals Required ..... 92
3.5.5.1 New or Expanded Decks/Trellises ..... 92
3.5.5.2 Deck/Trellis Replacements ..... 92
3.5.5.3 New Patios ..... 92
3.5.5.4 Modification to Driveways ..... 92
Exhibit 3.5.1—Typical Deck, Railing, Trellis Components ..... 93
Exhibit 3.5.2.1—Example: Deck and Patio Design ..... 94
Exhibit 3.5.2.1—Example: Deck and Patio (Stone) ..... 95
Exhibit 3.5.2.2—Example: Metal Picket Deck Railing ..... 96
Exhibit 3.5.2.2— Example: Wood or Metal Deck Railing ..... 97
Exhibit 3.5.2.2—Example: Cable Deck Railing ..... 98
Exhibit 3.5.2.3—Example: Trellis Design ..... 100
Exhibit 3.5.2.3—Example: Sloped Deck Trellis Design ..... 101
Exhibit 3.5.2.7—Example: Exterior Stairs Deck to Deck Design ..... 102
Exhibit 3.5.2.7—Example: Exterior Stairs Deck to Ground Design ..... 103
Exhibit 3.5.2.8—Example: Stone for Pathways/Front Entries ..... 104
Exhibit 3.5.3.2A—Chamfered Ends ..... 105
Exhibit 3.5.3.2B—Typical Post Tops ..... 106
Exhibit 3.5.3.3—Trellis Support Ends ..... 107
3.6—Auxiliary Structures ..... 108
3.6.1 Concept Statement ..... 108
3.6.2 Service Areas ..... 108
3.6.3 Garbage Can Enclosures ..... 108
3.6.4 Hot Tubs ..... 108
3.6.5 Air Conditioning Units, Heat Pumps, Generators, Electric Car Chargers, Rechargeable Solar Home Batteries 108
3.6.5.1 Location and Screening ..... 109
3.6.5.2 Air Conditioners and Heat Pump Equipment ..... 109
3.6.5.3 Generators ..... 109

3.6.5.4 Electric Car Chargers ..... 109
3.6.5.5 Solar Home Batteries ..... 110
3.6.6 Children's Play Equipment ..... 110
3.6.6.1 Play Equipment ..... 110
3.6.6.2 Play Houses ..... 110
3.6.6.3 Play Area Ground Cover ..... 110
3.6.7 Permanently Installed Benches ..... 110
3.6.8 Drainage Systems ..... 110
3.6.9 Mail Boxes ..... 111
3.6.10 Signs ..... 111
3.6.11 Clotheslines ..... 111
3.6.12 Weather Monitoring Equipment ..... 111
3.6.13 Approvals Required ..... 112
Exhibit 3.6.8—Example: Drainage A ..... 113
Exhibit 3.6.8—Example: Drainage B ..... 114
Exhibit 3.6.8—Example: Drainage C ..... 115
3.7—Fences, Privacy Screens and Retaining Walls ..... 116
3.7.1 Concept Statement ..... 116
3.7.2 Design Guidelines ..... 116
3.7.2.1 Fences—Dog Runs and Play Yards ..... 116
3.7.2.2 Privacy Screens ..... 116
3.7.2.3 Equipment Screens ..... 117
3.7.2.4 Retaining Walls ..... 117
3.7.2.5 Lattice Work (For Landscape Plantings) ..... 117
3.7.3 Approvals Required ..... 117
Exhibit 3.7.2.1—Example: Dog Run ..... 118
Exhibit 3.7.2.2—Example: Privacy Screen with Angled Slats ..... 119
Exhibit 3.7.2.2—Example: Privacy Screen—Solid ..... 120
Exhibit 3.7.2.2—Example: Privacy Screen—Metal ..... 121
Exhibit 3.7.2.4—Example: Rubble/Brush Retaining Wall ..... 122
3.8—Carport: Conversion to Garage and Remodeling ..... 123
3.8.1 General Design Concept ..... 123
3.8.1.1 Carport Conversions ..... 123
3.8.1.2 Carport Remodeling ..... 123
3.8.2 Architectural Design, Carport Conversions ..... 123
3.8.2.1 General ..... 123
3.8.2.2 Views ..... 123

3.8.2.3 Landscape ... 124
3.8.2.4 Doors ... 124
3.8.3 New Construction ... 124
3.8.4 Parking ... 124
3.8.5 Carport Remodeling ... 124
3.8.5.1 Enclosing Side and Rear Openings ... 124
3.8.5.2 Carport Storage ... 125
3.8.6 Approvals Required ... 125
Exhibit 3.8.2.1—Garage Double Fascia ... 126
Exhibit 3.8.2.1—Garage Flat Roof Design ... 127
Exhibit 3.8.2.1—Garage Even Gable Roof Design ... 128
Exhibit 3.8.2.1—Garage Elevation Uneven Gable Roof ... 129
Exhibit 3.8.2.1—Garage Fascia/Roof Extension Recessed Doors ... 130
Exhibit 3.8.2.1—Garage Recessed Doors ... 131
Exhibit 3.8.2.1—Examples: Garage Door Finish ... 132
3.9—Exterior Lighting ... 133
3.9.1 Concept Statement ... 133
3.9.2 General Design Concept ... 133
3.9.3 General Guidelines (applicable to all exterior lighting) ... 133
3.9.4 Color and Maximum Light Output ... 134
3.9.5 Interior Carport Lighting ... 135
3.9.6 Seasonal Holiday Decorative Lighting ... 136
3.9.7 Address Lighting (On from Dusk to Dawn) ... 136
3.9.8 Approvals Required ... 138
Exhibit 3.9.3—California Energy Commission; 2013 Building Energy Efficiency Standards (Title 24, Part 6 and Associated Administrative Regulations in Part 1) ... 139
Exhibit 3.9.3—Example of Wall Mounted Fixture ... 140
Exhibit 3.9.3—Example of Wall Mounted Fixture ... 141
Exhibit 3.9.3—Example of Pathway Fixture ... 142
Exhibit 3.9.3—Example of Deck Fixture ... 143
Exhibit 3.9.3—Example of Step Fixture ... 144
Exhibit 3.9.7—Examples of Internally Illuminated Address Lighting ... 145
3.10—Antennae (Including Satellite Dishes) ... 146
3.10.1 Concept Statement ... 146
3.10.2 General Design Concept ... 146
3.10.2.1 Original Concept ... 146
3.10.2.2 FCC Rules ... 146
3.10.2.3 Visibility Standards ... 146

3.10.3 Permitted Antennae ..... 146
3.10.4 Approvals Required ..... 146
3.11—Photovoltaic and Solar Panels; Rechargeable Solar Home Batteries ..... 148
3.11.1 Design Committee Approval Considerations ..... 148
3.11.2 No Prohibited Installations ..... 148
3.11.3 Design Committee Application ..... 148
3.11.4 Overall Design of Photovoltaic System ..... 149
3.11.5 Selection of Materials ..... 149
3.11.6 Visual Screening ..... 149
3.11.7 Removal of Existing Landscape Materials ..... 150
3.11.8 Setback Requirements for Ground Mounted Installations ..... 150
Exhibit 3.11.2—California State Code (Civil Code Section 714) CC&Rs and Solar Energy Systems ..... 151
Exhibit 3.11.2—California Public Resources Code Section 25980-25986 Solar Shade Control Act of 1979 ..... 153
Exhibit 3.11.3—Typical Photovoltaic System Components ..... 156
**Index of Revisions ..... 157**

# Glossary

- **ADU—**Accessory Dwelling Unit is an attached or detached residential dwelling unit that provides complete independent living facilities for one or more persons and is located on a lot with a proposed or existing primary residence and includes permanent provisions for living, sleeping, eating, cooking, and sanitation.

- **APE**—Access Parking Easement, typically a paved area, usually located on the E-2 Area of individual lots or on Common Area, for the temporary parking of visitor's vehicles. Guest parking in APE's is encouraged because the streets in the Ranch are narrower than normal and parking on streets can be dangerous.

- **APPLICATION FORM**—The form that a homeowner must complete and submit to the Design Committee if the homeowner plans to make any external changes to his or her property that require Design Committee approval.

- **APPROVED PLANT LIST** (APL)—The list of the California native plants that has been approved by the Town. This APL was compiled especially for the Ranch and is not the same as the PV Town plant list. No other plants may be planted in the ground on a homeowner's lot. (See Exhibit 3.1.1A.)

- **ARCHITECTURAL CONSULTANT**—A professionally trained and licensed architect, hired by a homeowner to assist in the design of an Improvement to a homeowner's property.

- **ASCC**—Architectural Site Control Commission, a Town of Portola Valley commission that is responsible for the review and approval of the external design of structures built within the Town. External changes to homeowner's structures generally require the approval of the ASCC.

- **ASSOCIATION**—Portola Ranch Association, the Association of homeowners at Portola Valley Ranch. Each homeowner is a member of the Association and is bound by the governing documents of the Association, including the By-Laws, the CC&Rs and the Association Rules. For purposes of this document, Portola Valley Ranch is synonymous with Portola Ranch Association.

- **ASSOCIATION RULES**—Rules promulgated by the Association Board of Directors and distributed to the homeowners of the Ranch that establish standards for the conduct of homeowners with respect to the use and maintenance of owner's lots and the Common Area and that are enforceable by the Association with respect to individual homeowners.

- **AVERAGING PROVISION**—A provision in the Town zoning ordinances that allows minor extensions of buildings outside the Building Envelope in some circumstances. (See Section 3.3.2.)

- **BACKYARD**—The founders of Portola Valley Ranch carefully planned and designed the homes to integrate and harmonize with the surrounding native habitat of the surrounding Open Space Preserves. Consequently, homes on the Ranch do not have traditional backyards which are generally enclosed by fences, are not visible to neighbors, and are on the back side of a home (*i.e.*, opposite the front entry). In the context of the Ranch, a "backyard" is considered the lot's E-1 area that is in the rear of the residence.

- **BOARD**—The Board of Directors of Portola Ranch Association. The Board is elected annually by the members of the Association and is responsible for managing the Association according to the Articles of Association, the By-Laws and the CC&Rs.

- **BUILDING ENVELOPE**—An area of each Ranch lot that defines the area within which all living space must be contained. Building Envelopes are mapped and certified by the Town and are recorded as a part of each lot description. Building envelope lines are the same as building set back lines.

- **CC&Rs** (Covenants, Conditions and Restrictions)—The agreement entered into by each homeowner when he or she takes title to his or her property that, among other provisions, sets forth the responsibilities of the Design Committee and places certain obligations on the Association and on homeowners with respect to property modification and maintenance.

- **CLAPBOARD**—An exterior siding treatment where boards are placed in a horizontal position so that the board above overlaps the board below creating a strong horizontal visual pattern.

- **COMMON AREA**—All of the land in Portola Valley Ranch other than individual homeowner lots. The Common Area includes the protected open space of Coalmine Ridge and elsewhere and the recreation areas, including the Ranch House, swimming pools, tennis courts, garden, orchard and vineyard. These lands and any improvements are managed with oversight from the Board of Directors.

- **DECK**—A structure attached to a house with direct access to the interior of the house and elevated above ground level.

- **DEFENSIBLE SPACE**—An area within a homeowner's property where specific wildfire protection practices are implemented. Includes the "Life Safety Zone" (0-30 feet from structures, entries and roadways) and the "Transition Zone" (30-100 feet from structures, entries, roadways and property lines).

- **DESIGN COMMITTEE ADMINISTRATOR**—The Ranch Manager provides administrative assistance to the Design Committee. The Administrator attends Design Committee meetings, takes and publishes minutes, notifies homeowners of applications to be considered, etc. The name of the current Design Committee Administrator may be obtained from the Ranch Office

- **DESIGN COMMITTEE CONSULTANT**—A professionally licensed architect who is an adviser to the Design Committee on architectural matters. The name of the current Design Committee Consultant may be obtained from the Design Committee Administrator or from the Ranch Office.

- **DESIGN COMMITTEE PROCEDURES MANUAL**—Rules promulgated by the Design Committee that govern the day-to-day operation of the Design Committee. The Procedures Manual is available on the PVR Web site and at the Ranch Office.

- **DESIGN CONCEPT**—The architectural and environmental standards for the development of Portola Valley Ranch that were conditions to the approval of the development. These concepts are set forth in approval documents such as the PUD statements and the Land Management Report and are implemented through the CC&Rs, the Design Guidelines and the Design Committee Procedures Manual.

- **DEVELOPER**—Portola Valley Associates, a limited partnership that is the original developer of Portola Valley Ranch.

- **DOWNHILL LOT**—A lot that slopes down away from the street.

- **E-1 AREA**—That portion of a homeowner's lot that is subject to an easement in favor of the Association for ingress, egress and maintenance purposes and within which all buildings must be placed. The Building Envelope for each lot is within the E-1 Area of the lot.

- **E-2 AREA**—That portion of a homeowner's lot, usually the largest portion, so designated as shown on subdivision maps that are subject to an easement in favor of the Association for ingress, egress and maintenance purposes. No structures may be placed on the E-2 Area, and only limited improvements such as paths and path lighting at front entries may be placed on the E-2 portion of the lot.

- **FASCIA**—Horizontal boards placed on the outside edges of structures to conceal the edges and to add architectural interest. Usually, fascia is located on the edges of roofs and decks and is at least 8" wide (vertical). Roof edges often have fascia comprised of two horizontal boards, one slightly overlapping the other.

- **FINE SCHEDULE**—The schedule of fines that has been adopted by the Board to be imposed on homeowners who are in violation of the CC&Rs, the Association Rules or the Design-Guidelines. The Fine Schedule is published in the Association Rules, Appendix C.

- **FIRE RISK MANAGEMENT GUIDELINES**—Part of the Operating Rules of the Association promulgated by the Fire Risk Management Committee and the Landscape Committee, as approved and amended from time to time by the Board.

- **FIREWISE COMMUNITIES**—A program of the National Fire Protection Association (co-sponsored by the USDA Forest Service, the US Department of the Interior, and the National Association of State Foresters) that "teaches people how to adapt to living with wildfire and encourages neighbors to work together and take action now to prevent losses". The program recognizes communities where homeowners have met specific requirements for reducing the risk of wildfire.

- **FLASHY FUELS**—Dead weeds and dry annual grasses, as well as dead vegetative material and litter that is capable of being easily ignited.

- **FLAT LOT**—A lot on which the building envelope is essentially level.

- **GUIDELINES**—The Design Guidelines contained in this document as modified from time to time.

- **HABITAT VALUE**—Habitat value measures how well a given natural area hosts an appropriate diversity of native plant species and, in doing so, provides food, shelter, water, nesting spaces, etc. for native wildlife.

- **IMPROVEMENTS**—As defined in the CC&Rs improvements are "...buildings, garages, carports, auxiliary structures, roads, driveways, pools, walkways, paths, trails, lanes, parking areas, fences, walls, covered patios, porches, elevated porches, sun decks, balconies, hedges, plantings, planted trees and shrubs, and all other structures or landscaping improvements of every kind, nature and description...and any items, structures, appliances or things affixed or in any way attached to the exterior of any buildings or structures."

- **IRRIGATION SYSTEM**—A system of pipes, tubing and outlets to carry water to plants that are part of a landscape.

- **JADU**—Junior Accessory Dwelling Unit is a unit that is no more than 500 square feet in size and contained entirely within the primary residence which may include separate santitation facilities or may share sanitation facilitites with the existing structure.

- **LADDER FUELS**—Any fuel (vegetation or other flammable material) that can carry fire vertically between two types of fuel (*e.g.*, grass to shrub, shrub to tree, tree to adjacent structure).

- **LAND MANAGEMENT PLAN**—A document promulgated by the Landscape Committee and PVR Staff that describes the land of Portola Valley Ranch and its management. The Land Management Plan contains the nuts and bolts of land management on Association and homeowner property, such as ecological calendars, lists of invasive species, maps and more. It also offers homeowners resources and best practice guidelines in managing their own properties.

- **LAND MANAGEMENT REPORT**—One of the original authorizing documents for the development of the Ranch that describes and prescribes how the natural environment of the land is to be protected and maintained. The Land Management Report was required and approved by the Town as a condition of approval of the development and cannot be modified without Town approval.

- **LANDSCAPING**—Landscaping includes: (1) movement, removal or addition of any soil or mulch materials, (2) planting, seeding, removing or replanting of any vegetation, (3) placement or replacement of any rock, (4) construction of grade level steps, walkways and retaining walls, (5) installation of irrigation systems.

- **LANDSCAPE COMMITTEE (LC)** —An advisory committee responsible for planning and maintaining landscaping of all Common Area Association Property and other areas agreed upon by the Town and the Association. The LC reviews landscape plans for homeowner lots and makes recommendations to the Design Committee. The LC is available to assist homeowners, if requested, with landscape issues on their lot.

- **LANDSCAPE MAINTENANCE**—includes, but is not limited to:
    - Removing dead plants and trees, watering and mulching (see Section 3.1.3.10 and Exhibit 3.1.3.10).
    - Pruning of plants to a natural form (if needed) that preserves the structural integrity of the tree or shrub.
    - Removal and control of vegetative fuels in accordance with the Fire Risk Management Guidelines.
    - Mowing to promote fire safety and ecological health. Many grasslands on PVR are dominated by fire-prone invasive annual grasses. Mowing is ideally done after such species have flowered but before they have set seed.
    - The control of Invasive Plants (see Exhibit 3.1.1B) and the removal of plants not on the APL.
    - The prevention, control and correction of any soil erosion. Bare exposed soil is not wise soil husbandry.

- **LOCALLY NATIVE PLANT**—Any plant species that occurs indigenously and naturally in the ecosystems of PVR or Coalmine Ridge. Hybrids or cultivars were purposefully developed by horticulturists for showiness or other specific characteristics and have a different genetic makeup than the naturally

occurring species, and are not considered locally native plants. The use of locally native plants in landscaping on PVR is encouraged, as it is beneficial to the habitat and ecology of the area.

- **MANAGER OR MANAGEMENT**—The person or company hired by the Board to manage the day-to-day operation of the Association under the direction of the Board.

- **PATIO**—An improved surface at ground level that may or may not be directly adjacent to a house. Normally patios provide an outdoor area for sunning and/or entertaining. Most patios will be open to the sky without fences or other enclosing structures.

- **PRIVACY SCREENS**—A partially open structure that provides visual privacy for a deck or patio from viewing by neighbors or from public areas such as streets and paths.

- **PROJECT**—A plan that when implemented will be an Improvement made to a homeowner's lot or to the Common Area.

- **PLANNED UNIT DEVELOPMENT, "PUD"**—A real estate development in which a town, in this case, the town of Portola Valley, allows a development to be implemented that would not meet the rules normally applicable to that particular property. As a result of such permission, the Town normally requires certain agreements from the developer that impose added conditions on the development of the property and on subsequent owners of property in the development. In the case of Portola Valley Ranch, these additional requirements are contained in the PUD Statements and the CC&Rs.

- **PUD STATEMENTS**—Two of the authorizing documents for the development of the Ranch that, along with the Land Management Report and other documents, define the Design Concept to be followed in the development, modification and maintenance of Ranch properties. The Design Guidelines must be consistent with and implement the PUD Statements. Any proposed Guideline that is inconsistent with the PUD Statements would require a modification of the PUD Statements by the Town before it could become effective.

- **RAILINGS**—Structures on the edge of decks, paths and patios to restrict the movement of persons off the edge of the deck, path or patio. Railings may be considered to be safety devices and therefore must strictly adhere to building code requirements.

- **RANCH**—Portola Valley Ranch in its entirety.

- **RANCH MANAGER**—See "Manager" above.

- **RANCH OFFICE**—The Office maintained and staffed in the Ranch House in which certain administrative functions of the Association and the Design Committee are conducted.

- **RIDGELINE LOT**—A lot at or near the ridge of a hill where the building envelope would allow the building of structures that would be higher than the ridge and therefore visible from distances. The Ranch has been laid out so that there are few Ridgeline Lots.

- **SCREENS** (other than privacy screens)—External devices to protect doors, windows, skylights, decks and patios from exposure to direct sun. Screens are usually installed so that they may be easily installed and removed to quickly respond to changing sunlight conditions.

- **SIDING**—The covering of the external walls of structures such as houses, carports and garages. Typical siding materials at the Ranch are wood shingles, clapboard, T111 plywood, plywood board and batten, fiber-cement, and stucco.

- **SIGNIFICANT VIEW**—A view from a home's rooms or decks where residents spend substantial time that includes a distant view of: (a) landmarks, (b) unique features and vistas such as Windy Hill, Coalmine Ridge, Foothill Park, or San Francisco Bay; or (c) San Francisco and other Bay Area towns where lights are visible at night. A view of a nearby building and/or a landscaping feature is not a Significant View.

- **TOWN**—The Town of Portola Valley.

- **TRELLIS**—An open structure built over a deck, patio or walkway to provide partial shade to the area under the Trellis or to add architectural interest. Most Trellises at the Ranch are built over decks and are open on the sides.

- **TRIM**—The material that outlines a door or window and joins the siding to the frame of the door or window, as well as vertical boards placed on inside and outside corners of houses.

- **UPHILL LOT**—A lot that slopes up from the street.

- **VIEW CORRIDOR**—An open space between, over or through buildings or landscaping that provides views of a distant vista of natural beauty. (See Exhibit 3.1.3.6.)

- **WILDLAND-URBAN INTERFACE (WUI)**—The area where residential land meets open space. In California, this area is identified by the State as a "fire hazard severity zone" where specific restrictions apply.

# Section 1—Purpose, Basis, Scope, Modification and Enforcement of Design Guidelines

## 1.1—What Are They and Why Have Design Guidelines?

### 1.1.1 Town Requirements

Design Guidelines set forth the standards that govern the appearance of construction, modification and maintenance of residences at Portola Valley Ranch. These Design Guidelines also fulfill an obligation to the Town of Portola Valley to ensure that the visual aspects of the Ranch are maintained in accordance with the standards established by the Town when the Ranch development was approved.

### 1.1.2 Value to Homeowner

Most homeowners understand and appreciate the design concept of the Ranch and expect that concept to be maintained to preserve and enhance their property values, especially as it relates to modifications neighbors may make to their homes. Design Guidelines are, as the name implies, guidelines to be used by the homeowner and his or her consultants in preparing applications to the Design Committee for modifications to his or her property and to be used by the Design Committee in evaluating and approving or denying such applications.

## 1.2—What Is the Basis for the Design Guidelines?

### 1.2.1 Town Basis

The Town of Portola Valley's General Plan, Zoning Ordinances and Design Standards relate to the entire Town. At the time Portola Valley Ranch was approved as a Planned Unit Development (PUD), certain exceptions were made to these broadly applicable standards. These exceptions resulted in PUD Statements, the documents that define the essential characteristics of the Ranch. Other documents such as the Land Management Report also set forth basic standards that control the development and maintenance of the Ranch. Typical home designs were pre-approved by the Town that included layout, elevations, roofs and materials. The Design Guidelines implement these basic standards for the Ranch with respect to design concepts that must be applied to all Ranch properties. The Guidelines must be consistent with all of these documents.

### 1.2.2 Relationship to CC&Rs

The Association CC&Rs create binding obligations on the Association and the individual homeowners to maintain the design concept of the Ranch as set forth in the PUD Statements and related documents. The CC&Rs authorize the Board to appoint the Design Committee as an independent body to ensure that all external changes on the Ranch, both to homeowner property and Association property, are consistent with the Ranch design concept. The Board resolves disagreements between the Design Committee and individual homeowners with regard to these issues. The Landscape Committee acts in an advisory capacity to the Design Committee on landscape applications.

### 1.2.3 Conformance to PUD Statements

The purpose of the PUD Statements is to "...minimize the disturbance of the natural terrain and tree cover by strengthening the cluster concept already accepted at a larger scale." To do this, the "man-made" elements of the project, *i.e.*, cuts, fills, houses, fences and cars are organized into as close a relationship as possible with the circulation spine formed by the roads. At the same time, the landscaping is to be zoned to increase the areas of the site retained in a natural state and to enhance the quality of the visual experience of the development to harmonize with surrounding vegetation patterns. Design Guidelines therefore must be directed to accomplish these goals and to ensure that the "man-made" elements that are closely grouped harmonize with each other.

### 1.2.4 What Property Is Covered by the Design Guidelines

All changes to the exterior of any property are covered by these Guidelines. The E-1 and E-2 portions of a homeowner's property are defined by the plot plan for each individual lot and are on file at the Town. The Building Envelope is also defined on the plot plan and is entirely within the E-1 area. The Common Areas are also covered by these Guidelines.

## 1.3—Purpose and Objectives of Design Guidelines

Design Guidelines have been in existence at the Ranch since its inception. The Design Guidelines establish rules and articulate concepts to ensure the Ranch continues to meet the objectives stated in the PUD Statements. The Ranch does not have dissimilar architectural styles such as "French Chateau" next to "English Tudor" next to "Industrial Modern." Colors blend with the natural surroundings and the landscaping emulates the natural vegetation of the surrounding areas.

The Guidelines also help ensure that View Corridors and Significant Views are preserved and that "man-made" elements blend rather than clash with each other and with the natural surroundings. Requirements designed to ensure that a home is not visible from another home are not considered views protected through Design Guideline requirements.

The Design Guidelines have been developed to ensure that homes and landscaping provide for a reasonable expectation of privacy, balanced with the need to consider other factors such as fire safety, and collateral consequences to immediate neighbors and public areas. In applying the Design Guidelines, the Design Committee will, to the extent reasonably possible and without prejudice to requests in compliance with the Design Guidelines, seek to protect against direct line of sight views into the interior of a home from adjacent properties and from public areas. Principles that can be considered include, but are not limited to:

- Direct views from a glass window/door or deck of one home into the interior of another home are disfavored.
- A window/door or deck of an adjacent home that is visible, but at an angle or distance that does not realistically allow for a materially invasive line of sight into the interior of another home would not be considered a privacy concern.
- Decks situated with the potential for direct views into an adjacent home can mitigate any potential privacy concerns with the installation of a privacy screen, and should be considered a presumptive solution as long as such screen does not block a Significant View or View Corridor.

- Decks or patios are considered exterior spaces and thus visibility from one deck to another is not necessarily a privacy concern, absent special circumstances.

The Ranch community and the Town of Portola Valley both believe these Design Guidelines are important to the overall value of Ranch property.

## 1.4—Undeveloped Lots, Tear Downs and Destruction Replacements

### 1.4.1 Undeveloped Lots

As of 2024, there is one remaining undeveloped lot at the Ranch. Each lot has a Town approved plan specific to that lot which takes into consideration the site, the surrounding structures and the general design concepts.

Once an undeveloped lot has been sold by the Developer to a new owner, the public review process may change depending on whether the owner desires to make changes to the plans previously approved by the Town. If no modifications are desired to those approved plans, no further public review is required by either the Design Committee or the ASCC for those aspects covered in the approved plans. All other aspects must be approved by the Design Committee and the ASCC. If the new lot owner wants to modify the previously approved plans, both Design Committee and ASCC approval is required. The owner will be subject to the most current version of the Design Guidelines and ASCC rules. The Design Committee is not bound by any previous approvals and may require significant modifications to the previously approved Developer plans.

### 1.4.2 Tear Downs and Rebuilds

If a home is destroyed by fire, earthquake or other disaster, or if a homeowner decides to tear down the existing home and rebuild, all aspects of the project must be reviewed and approved by the Design Committee. Special Town rules will also apply in these situations.

## 1.5—What Are the Design Guidelines?

The Design Guidelines represent a set of concepts in addition to specific rules that address the design, appearance, and functionality of home exteriors as well as aspects of landscaping. The Guidelines seek to maintain the essential visual and aesthetic characteristics of the Ranch as set out in the PUD statements, and thus do not include home interiors. Because the specific rules articulated by the Guidelines cannot realistically be exhaustive, the Design Committee evaluates and acts on applications in a manner that implements the design concepts articulated in the Guidelines to address situations that are not otherwise clearly addressed by specific rules. These Design Guidelines should be interpreted so as to be consistent with the CC&Rs; provided, however, that, to the extent that they are inconsistent with the CC&Rs, the CC&Rs supersede these Design Guidelines.

The CC&Rs provide that all Design Committee “decisions shall also be consistent with any governing provisions of the law…Nothing in this Article 10 authorizes a physical change to the Common Area, a Lot, or any structure thereon in a manner that is inconsistent with the Governing Documents, any law governing land use, including building codes, or that would adversely affect the health and/or safety of any of the Occupants or the public.” (CC&R Section 10.06). As such the Guidelines address certain, but not all, aspects of code compliance as well as safety considerations. However, the Guidelines and Design Committee review do not replace an owner’s responsibility to ensure structural integrity or other engineering related considerations and comprehensive compliance with building codes. The Guidelines do not address structural/engineering elements, except when

those elements impact the visual aesthetics of the Ranch. The homeowner must rely on his or her own experts for structural/engineering standards.

The Design Committee will not conduct in-depth code compliance or safety reviews. Applicants should be aware that if the Design Committee is reasonably aware of possible code compliance issues, an approval may be contingent on Town approval, and a mid-construction change must be submitted to the Design Committee if the Town requires modifications. If, during the review of an application, the Design Committee becomes aware of a safety concern, the Committee may consult with the Board of Directors or experts.

Please note that the Design Guidelines, including Exhibits, describe requirements and designs that may be superseded by updated Town, State, and Fire District building codes. As a result, residents and their contractors are responsible for ensuring compliance with all current building codes and requirements.

## 1.6—How Are the Design Guidelines Prepared and Modified?

The original Design Guidelines were prepared by the Developer and its architectural consultants. The Design Committee continually reviews and approves revisions to these Guidelines to reflect current design concepts, materials, and methods in an effort to provide homeowners with greater flexibility and choice while preserving the basic design concepts essential to the Ranch aesthetic. In addition, when guideline updates are prepared, they may reflect updates or changes to building codes or governing law. Updates to the Guidelines are the responsibility of the Design Committee and are generally accomplished by working with members of the Landscape Committee, the Fire Risk Management Committee and other interested homeowners. Updates representing significant changes are distributed to all homeowners. The Board of Directors approves any updates to the Guidelines.

The Ranch is a designated Wildland-Urban Interface (a zone of transition between unoccupied land and human development) - a term commonly used for areas that experience wildfires. In addition, the Ranch is certified as a Firewise community that involves implementing certain Firewise practices aimed at reducing wildfire risks. These Design Guidelines have therefore been updated with good Firewise practices in mind.

## 1.7—How Are These Design Guidelines Used and Enforced?

### 1.7.1 Homeowner Use

Homeowners who are contemplating a construction or landscaping Project should first ensure that they have the most current version of the Guidelines by checking with the Ranch Office or the PVR website. The online version of the Design Guidelines is readily searchable with key words to help identify all relevant sections of the Guidelines.

For example, if you are going to expand the primary bedroom/bath and also expand the deck there are several applicable sections. Section 3.3 addresses the expansion of the footprint of your home and Section 3.4 addresses exterior treatment of walls and roofs, and Section 3.5 discusses decks and associated railings and trellises. If the Project includes adding lights, Section 3.9 addresses exterior lighting. Section 3.2 covers exterior colors for all of the above additions and structural elements. Finally, Section 2 provides information on what is required when submitting an Application for the Project to the Design Committee.

The homeowner and his/her architect, consultant, and designer are responsible for identifying all exterior structural and design elements involved in the Project, and for ensuring compliance with the relevant sections of the Guidelines.

### 1.7.2 Design Committee Use

The Design Committee applies the Guidelines when reviewing Applications. All approvals must conform to all applicable Guidelines. If an application is not approved, the reason for that action will be explained with reference to the rules and concepts outlined in the Guidelines. The Design Committee will work with the homeowner to find a design approach consistent with the Guidelines.

A homeowner may propose a material, design or method not currently included in the Guidelines and the Design Committee will consider the proposal in the context of conformance with the overall Ranch aesthetic; any approval of such a deviation may stimulate a revision to the Design Guidelines.

It is important to note that the existence of a design element on the Ranch does not mean that the Design Committee has approved that element, or that the Committee would approve that element under the current Design Guidelines or in the context of any particular site. In particular, some pre-existing elements may be non-conforming under the current Guidelines and would not again be approved, and some elements may have been approved for site-specific reasons that would not support an approval at other locations.

### 1.7.3 Board of Director Use

If a homeowner disagrees with a Design Committee decision and appeals to the Board, the Board, in deciding the appeal will consider whether or not the Design Guidelines were appropriately applied to the specific application.

### 1.7.4 Enforcement of the Design Guidelines

The CC&Rs are for the benefit of the entire Ranch community and are enforced with respect to individual homeowners to maintain the integrity of the community. Guidelines are enforced as provided in the CC&Rs, the Association rules, the Design Committee Procedures Manual and the Fine Schedule. In some cases, the Board of Directors may require that approved modifications to an individual property be recorded as a deed restriction to ensure continued compliance by future owners with the conditions of approval.

### 1.7.5 Use by the Town

Although not bound by the Guidelines, the ASCC will typically reference them in reviewing applications. In some cases, the ASCC has delegated approval for building permits to the Town Staff who largely rely upon Design Committee approvals to ensure compliance.

# Section 2—Design Application & Review Process

## 2.1—Background

As stated in Section 1.1 Portola Valley Ranch was created as a Planned Unit Development intended to blend harmoniously with the natural character of the land and surrounding open spaces. The CC&Rs: (1) ensure that all homes within the development continue to preserve that overall integration, and (2) establish the requirement that all proposals for exterior changes to a homeowner's lot or structure be reviewed and approved by the Design Committee. It is the homeowner's responsibility to file an Application with the Design Committee requesting approval for any contemplated change not specifically exempted in the Design Guidelines. This application must be submitted and receive approval prior to commencing any work. Similarly, it is the homeowner's responsibility to obtain any Town approvals that may be required prior to proceeding.

Even if an application is not required, it is the homeowner's responsibility to ensure that any work complies with the provisions of the Design Guidelines.

It is the responsibility of the homeowner to be sure his/her architect, contractor and designer are all aware of these Design Guidelines and that a consultant's plans and the final project conform to the Design Guidelines.

## 2.2—The Application Process

### 2.2.1 Standard Application

For all applications other than "Fast Track Applications" (see Section 2.2.2), the homeowner or their representative should:

- Submit a completed Application Form with all the required supporting documentation and fee to the Ranch Office by the 15th of the month for review by the Committee at its next monthly meeting. The Ranch Office can answer any questions and provide a schedule of Design Committee meetings.
- Ensure that all required plot plans, elevation drawings, dimensions, specifications, etc. are provided so that your application is not delayed during the review process. An application is not considered "complete" until all required or requested documentation has been provided.
- Be aware that your project may require staking out the boundaries and heights of your proposed project. If staining or painting is involved, samples must be painted and labeled with the location identified in your application. These actions must be completed at least 1 week prior to the Design Committee meeting.
- Attend the Design Committee meeting when your application will be reviewed to answer questions and to work with the Committee to resolve any potential concerns that may arise.

The Design Committee approves most applications within the monthly cycle if an application is "complete"; however, if an application is incomplete or if modifications are necessary for compliance with the Design Guidelines, an application will be continued to the next meeting.

Please refer to the Design Committee Procedures Manual or the PVR website for a copy of the Standard Application forms and fee schedule.

### 2.2.2 Fast Track Applications

For simpler changes that are smaller in scope, there is a Fast Track process that allows a homeowner to submit an application that will be reviewed by at least 3 members of the Design Committee and is done outside of the more extensive full review process on the monthly cycle. For a list of all fast track application categories, please refer to the Design Committee Procedures Manual. The Fast Track application forms can be found in the Procedures Manual and on the PVR website.

## 2.3—Design Committee Procedures

### 2.3.1 Design Committee Procedures Manual

The Procedures Manual, distributed by the Association, gives current information regarding the operation of the Design Committee and the procedures that govern its operations. The Procedures Manual also contains the current fee schedule and list of items that are exempt from Design Committee review. A homeowner contemplating an improvement to his or her property should consult the Procedures Manual (available in the Office and on the PVR website) before starting.

### 2.3.2 Design Committee Process

A Standard Application for Landscaping will be referred to the Landscape Committee, which will provide a recommendation to the Design Committee at the time the application is considered; final approval for landscape proposals is made by the Design Committee.

A Standard Application for Architectural changes to structures will be referred to the Design Committee's Architectural Consultant for evaluation. The Consultant will present his/her recommendations to the Design Committee when the Application is considered. In addition, each member of the Design Committee generally visits the site prior to the meeting to review the proposal and identify any possible impact on neighbors or overall Ranch aesthetic. Refer to Exhibit 2.3.2 for specific instructions for filing an application to the Design Committee and the Town.

After initial review of an application, if the Design Committee believes that application raises significant questions not sufficiently addressed by the Design Guidelines, the Design Committee may consult with the Board of Directors or experts. The Design Committee may also choose to decline to act and refer the application to the Board for review or action.

### 2.3.3 Design Committee Approval or Denial

The Design Committee may approve, disapprove or conditionally approve an Application.

(i) If approved, the applicant may proceed with the Project, provided necessary Town approvals have been obtained. (See Exhibit 2.3.2.) The Project must be completed strictly in accord with the approved plans.

(ii) If approved with conditions, the applicant may proceed with the Project provided that he or she is willing to meet the conditions of approval, subject to any required Town approvals.

(iii) If disapproved, the Design Committee will provide the specific reasons for the disapproval.

If the applicant does not agree with the conditions of approval or the disapproval, he or she may appeal the Design Committee decision to the Board. The Design Committee Procedures Manual defines the process for an applicant or any homeowner to appeal to the Board.

### 2.3.4 Mid-Construction Change to an Approved Application

The Design Committee recognizes that as a Project proceeds, the homeowner may wish to modify the original plan. Under these circumstances, the resident should submit a mid-construction change to the Design Committee (using the Standard Application form) for review and approval prior to proceeding with those modifications.

### 2.3.5 Approval Expiration and Final Review

Design Committee approval extends for 24 months from the date of approval. If the Project is not completed within 24 months of approval, the homeowner must apply for and obtain approval for an extension or the original approval will be considered expired and a new application required.

Once a Project is completed, the homeowner is requested to notify the Ranch Office and the Committee will conduct a final inspection of the Project to ensure that it has been completed according to the approved plan. If, however, no notification is received, a final inspection will be conducted 24 months after the approval date. If the project involves landscaping, then a representative from the Landscaping Committee will attend the final inspection.

A letter is issued following the final inspection. Any deviations from the approved plan that were not approved by the Design Committee as a mid-construction change could require a new Application that the Design Committee may approve or disapprove. It is the homeowner's responsibility to bring the Project into compliance. If a building permit has been obtained from the Town, a final inspection by the Town will also be required.

## 2.4—Notifications

All Ranch homeowners will receive notice of all Applications in a monthly list distributed with the monthly newsletter. Those Applications to be heard at the next meeting of the Design Committee will be listed separately. In addition, all homeowners within 250 feet of the proposed Project will receive written notice of the Application. Notification to all homeowners may be made regarding Projects with broader implications. The submitted plans and the Application will be maintained at the Ranch Office and made available for viewing by any Ranch homeowner during office hours. This notification and additional information provide interested homeowners the opportunity to present their views with respect to the Project either in writing or at the Design Committee meeting at which the Application will be discussed.

# *Exhibit 2.3.2—The Design Committee and Town Review Process*

Certain Projects will require both Design Committee and Town ASCC review prior to applying for a building permit. Other Projects, which are either small in nature or internal to your existing home, may need no approvals or only a building permit. After reviewing this quick checklist, a homeowner will be able to determine the type of process required before starting the Project. If there are questions, please call the Ranch Office. Questions regarding the Town review process should be addressed to the Town Planning Coordinator at Town Hall.

**Step I—Design Guideline Editions.** Call the Ranch Office or check the PVR website to verify that you have the current version.

**Step 2— Review Scope.** Understand the scope of the Project; identify those items that are external to the existing home. Review all Sections of the Design Guidelines applicable to the Project. Note the Design Guidelines are readily searchable by key words.

**Step 3—Inform Consultants.** If an architect, landscape architect, contractor or building designer is retained, the homeowner is responsible for ensuring they are aware of and follow the Design Guidelines.

**Step 4—Cross-Reference Details.** Reference the proposed Improvements with those sections of the Design Guidelines that apply to the Project. For example: if the Project includes landscape improvements, adding exterior lighting and adding a bedroom, multiple sections of the Design Guidelines should be consulted.

**Step 5—Caution.** Remember that the existence of a design element elsewhere on the Ranch does not mean that the Design Committee has approved it or would approve it under the current Design Guidelines or in the context of your particular site. The Design Committee is not bound by the existence on the Ranch of a particular design element, without regard to whether it was implemented with or without approval. Do not assume that because it exists on the Ranch, it would be approved today.

**Step 6—Apply to the Design Committee.** Submit 2 hard copies of the Application package including all required supporting documentation along with your completed Application and the appropriate fee by the 15th of the month. In addition, any documentation 11”x17” or larger must also be provided in PDF to the PVR Office. Verify the meeting date on which the Design Committee will hear your Application. Be sure to carefully review the Application form and Design Guidelines to ensure that all the specified drawings and supporting documentation or specifications are provided or your application will not be deemed “complete”.

A. Ensure a site/plot plan is provided if the project involves a change in the footprint of the existing structure(s), major landscape plans, or installation of walkway lighting or an air conditioner/generator. This drawing should include:
    - Property lines
    - Location of existing house, carport and/or garage
    - Location of all proposed additions with dimensions
    - Location of E-1 line
    - Location of E-2 line
    - Location of building envelope line
    - Location of non-living line
    - Location of closest adjacent structures to the left and right of existing residence as viewed from the street.

- Location of any utility easements, access easements or APEs.

For landscape applications include: location and quantities of all plant material and/or other landscape improvements being proposed, a complete list of all plants with common and botanical names (with key to location on site map), and samples of rock material or other materials as requested by the Design Committee.

B. Floor plans for all external changes must be included:

- Floor plan view showing all changes being proposed as well as identifying existing floor plan conditions. This plan should show all exterior dimensions of the affected areas.
- Skylight locations should also be shown on this plan.

C. Exterior elevations of existing and proposed changes to the structures. These elevations should include the following:

- Identify existing and proposed materials for siding, handrails, skylights, windows, decking, trellises, privacy screens, etc.
- Highlight those areas of proposed changes
- Provide dimensions of any exterior Improvements including handrails, privacy screens, trellises, windows, doors, etc.
- Exterior elevations should also provide vertical distances from grade to finish floor heights and grade to finish roof heights.
- Any additional information requested by the Design Committee.
- The Application package should also include design details, product specifications and samples as called for in the relevant sections of the Design Guidelines and Application Form.

**Step 7—Stake Out Changes and Apply Paint/Stain Samples.**

A. The applicant must stake out the boundaries of the proposed Project and/or location of elements of the Project. Staking must include indications of height using tape, string or boards for any Projects other than landscaping. Taping of locations of proposed additions of windows, doors, etc. will satisfy the staking requirements for those elements. The purpose of staking (or storey poles) is to provide a visual outline of the proposed structural addition (examples are provided in this Exhibit as "Exhibit 2.3.2—Step 7—Stake Out Changes").

B. If painting or staining is involved, 2'x2' samples must be painted and labeled and the location of the sample should be stated on the Application. Note that samples must be painted at eye level in a location where they may be viewed in full sun.

C. Staking and paint samples must be completed at least 1 week prior to the Design Committee meeting for viewing during site visits. If staking and paint samples are not completed on time, the Application may be deferred to a later meeting.

**Step 8—Discuss with Neighbors.** Consider sharing your plans and discussing the changes with surroundings neighbors. This should uncover any significant concerns early in the process and might resolve any issues prior to Design Committee review.

**Step 9—Present to the Design Committee.** The Application will be reviewed at a scheduled Design Committee meeting. Presentation may be by the homeowner or by his or her architect, consultant, designer or contractor. If unusual issues arise, the Design Committee may elect to conduct a site visit to better understand

Project impacts. If the homeowner is not represented and significant issues arise, the review may be continued until a homeowner representative can attend.

**Step 10—Design Committee Decision.** Design Committee action will be taken with one of the following results:

- Approval as submitted with no conditions
- Approval as submitted with itemized conditions
- Continued based on request for additional information or alternative proposal
- Denial of application

**Step 11—Town ASCC.** After Design Committee approval, further approval by the ASCC may be required. Please check with the Town to determine whether ASCC approval is required and if so, submit an application to the Town. If the ASCC approves the Project with modifications, the homeowner must obtain Design Committee approval for those changes prior to proceeding.

**Step 12—Building Permit.** Determine if the Town requires a building permit. Most improvements with the exception of replanting of landscape areas and installation of low voltage lighting will require a Town building permit. This step in the process must be handled directly with the Town building department. Please refer any additional questions regarding the process directly to that Town department.

**Step 13—Rules for Contractors.** Provide your contractor with a copy of the Rules for Contractors that you will receive with your notice of approval of your Application. During the course of construction, you are responsible to ensure that your contractors comply with these rules. A current copy of these rules can be obtained from the Ranch Office or on the PVR website.

**Step 14—Mid-Construction Change.** <u>If at any time after Design Committee approval is received, a change is made to your approved plan, you must obtain Design Committee approval of that change prior to implementing. Any plans submitted to support a mid-construction change must clearly highlight what changes are being requested and present those changes in comparison to the plans as last approved by the Design Committee.</u>

**Step 15—Final Sign Off.** Complete the Project within 24 months from Design Committee approval. Once the Project is complete, the Design Committee will require a final sign off to ensure that the final constructed Project is in conformance with the Design Committee approval. It is the homeowner's responsibility to inform the Ranch Office that the project is completed and ready for final inspection. If notice of completion is not received a final inspection will be conducted 24 months after approval.

# *Exhibit 2.3.2—Step 7—Stake Out Changes*

Examples of story poles for proposed additions

# Section 3—Landscaping and Outdoor Structures
## (including Lighting, Antennae and Solar Panels)

## 3.1—Landscaping

### 3.1.1 Concept Statement

Preserving the natural landscape of the Ranch by replicating the vegetative patterns of the surrounding hillsides was an important consideration by the Town in authorizing the development of Portola Valley Ranch. The Planned Unit Development Statement and the Land Management Report issued by the Town include requirements for the use of a designated list of California native plants. This **"Approved Plant List"** (APL) specifies the **only** plants authorized for planting in the ground at the Ranch. (A copy of the current APL may be obtained from the Ranch Office or found on the PVR website). See Exhibit 3.1.1A for a description and explanation of the APL. The APL can be amended by the Association.

As part of the Town's original approval process for the development of the entire Ranch, a master landscape plan as well as a plan for each street was prepared. These plans designate the E-1 and E-2 areas of the individual homeowner's lot.

These original plans reflect the design concept that landscaping should flow from one lot to another and to adjacent open areas and that property lines should not be delineated by landscaping. Plants should be grouped randomly, not linearly, creating a natural rather than a formal effect. Landscaping to create a "turf" like appearance may be accomplished with plants on the APL that grow and spread as ground cover. Naturalistic screening of parking areas and deck supports consistent with fire safety is encouraged. Pruned trees and plants, installed so closely together as to simulate a fence or hedge, are inconsistent with the Ranch Design Concept.

Over the years, many of the plants in the original plans have grown substantially, and seedlings from them have created an over-crowded landscape. While thickets of trees and shrubs can provide aesthetic benefits, they are incompatible with fire safety and the sustainability of a healthy oak woodland habitat. Erosion, habitat value, locally native plants (See Glossary), and fire risk factors (see Fire Risk Management Guidelines) should also be considered when creating a design and selecting plant materials, and when addressing annual vegetative fuels management. Invasive plants (introduced noxious weeds) are not permitted anywhere on the Ranch (See Exhibit 3.1.1B). No planting may be done which, when mature, could create a potential fire hazard, impair Significant Views or View Corridors, or block line-of-sight for traffic.

Landscaping is an integral part of the design of each home and of the Common Areas (also referred to as Association Property) and as such is governed by the CC&Rs in the same way that architectural control of structures is governed.

The Design Committee, assisted by the Landscape Committee, is responsible to ensure that the Ranch continues to meet the landscaping requirements of the Town.

### 3.1.2 Fire Safety and Landscaping

The Ranch is in the Wildland-Urban Interface (WUI) zone where structures and other human development meet or intermingle with undeveloped wildland or vegetation fuels. The Ranch is annually certified as a Firewise Community which involves implementing certain Firewise practices aimed at reducing wildfire risks.

These Design Guidelines have also been developed with good Firewise practices in mind, following expert consultation and current fire codes.

Homeowners are responsible for fire risk management on their own property. This consists of planning and maintaining vegetation appropriately, not "clearing." Flashy fuels (see Glossary) should be carefully removed from areas near structures, and sometimes selected removals of shrubs and/or trees are necessary. Ideally, homeowners would balance the three prongs of aesthetics, habitat value, and fire safety to create safe, healthy, and sustainable landscapes.

The Fire Risk Management Committee, in conjunction with the Landscape Committee, is responsible for fire risk management on Association Property (Common Areas) as outlined in the Fire Risk Management Guidelines which are available for viewing and download on the PVR website. If you have a question about fire risk management on Association property, please contact the Ranch Office.

Keeping your home safer from wildfires begins from the structure and moves outward, and begins from ground and moves upward. The 0–5' zone around a structure (*i.e.*, home, deck, carport/garage, fence) is the most important because embers can ignite debris and vegetation, which in turn ignites wood siding and decks, and breaks windows. This zone must be free of mulch and flammable debris. Woodside Fire requires that this zone be free of vegetation with the exception of groundcovers consisting of irrigated Approved Vegetation (defined by Ordinance) if they do not form a means of readily transmitting fire as determined by the fire code official, and appropriately pruned established trees. See Exhibit 3.1.3.11 for guidance on landscaping in the 0–5' zone.

There are no truly fire-resistant plants. All vegetation can become fuel when the temperature is hot enough. Plants ranked as "high" or "moderate" water use on the APL may be more fire resistant than those plants marked as "low" water use. Chaparral plants often contain volatile oils in their leaves and thus might be less fire safe than others. Fire vulnerability of the local ecosystems could be ranked from high to low as follows: Chaparral, Grassland, Woodland, Riparian.

Maintenance is probably the most important variable for fire resistance, and the appropriate methods, tools and timing of such maintenance depends on the plant species and location. For specific advice, talk to a landscaper who is knowledgeable about California native plants or reach out to the Landscape Committee at landscape@pvranch.org, or contact the Office. Plants that are green and correctly watered maintain a higher moisture content than those that are drought-stressed. Mulching helps plants retain moisture, but too much mulch can be a fire hazard. Maintain mulch about 3 inches deep, with no mulch in the 0–5' zone.

Separation between vegetation and building structures helps slow wildfires. Contiguity of vegetation allows fire to spread. Try to create gaps on both the horizontal and vertical planes so that there are spaces where fire cannot easily reach. Planting should be done with an eye to the potential full size of the plant at maturity such that it never grows within 5 feet of the structure. Trunks of established trees are excepted.

Specific fuel reduction basics are as follows (see Fire Risk Management Guidelines for further details):

- **Trees**—Remove branches to a height of 6–8 feet from the ground or 1/3 of tree height if <18 feet tall. Trim back all branches at least 5 feet from roof edges and sides of structures, and 10 feet from the roof surface and chimneys. Remove dead branches less than 3 inches in diameter. Prune all branches overhanging APEs and roadways to at least 13½ feet above the road surface.
- **Shrubs**—Reduce shrub height under trees to 18 inches or a 6 feet separation from tree branches to eliminate ladder fuels. Shrubs, including all foliage, must be kept 5 feet away from decks and structures. Clear dead material from within or underneath shrubs. Break up large masses of shrubs, creating fire breaks between clusters. Trim all shrubbery so that it does not overhang APEs or roadways.

- **Dead Wood and Litter ("Flashy Fuels")**—Dead or dying limbs, branches, twigs, flowers, seeds and leaves should be removed from the plant with regularity, especially during fire season. Remove from property all dead wood less than 8 inches in diameter. [NOTE: Woodside Fire requires any dead wood >8 inches in diameter be entirely in contact with the ground and cut into smaller logs.] Exception: Dusky footed wood rat nests. These conical structures house our native protected mammal and should be left undisturbed with a 5-foot buffer of undisturbed vegetation if possible. Clear leaf litter and mulch to be no more than 3 inches in depth.
- **Grass**—All invasive grass within 100 feet of structures and within 10 feet of the road is mowed annually to no more than 4 inches high. Native bunchgrasses should be regularly chopped back (every year or two) and raked out to avoid thatch buildup.
- **Vines**— Woodside Fire Protection District Ordinance 24-01 adopted 4/30/24 does not allow climbing vines on structures within 100 feet around a structure unless the fire code official determines that they are:
    - Greater than ½ inch in diameter
    - Are Approved Vegetation (defined in the Ordinance as "Plants, shrubs, trees, groundcovers, and other vegetation approved by the Fire Code Official as Fire Resistive Vegetation or that otherwise exhibit properties, such as high moisture content, little accumulation of dead vegetation, and low sap or resin content, that make them less likely to ignite, contribute heat or spread flame in a fire. Typically, vegetation must be irrigated to be Approved Vegetation.")
    - Do not constitute a fuel ladder
    - Are irrigated, cleared of dead material, located and maintained so that they do not cause damage to any part of the structure.

  Existing vines that do not meet these criteria must be removed. No new installation of vines on structures is allowed.

  A well-maintained, healthy vine on a free-standing support, not structure, is permitted if >5 feet from a structure and meets the above criteria.
- **Decks**—No planting or storage of combustible materials is allowed underneath decks or cantilevered portions of structures. Storage of even non-combustible materials on the ground in these areas can promote accumulation of leaf litter or other flammable materials and is discouraged. Embers or sparks can fall on any accumulated debris, igniting and causing your deck to catch fire. Because this fire risk exists independent of any stored items, these areas should be actively monitored and kept clear of all flammable debris.
- **Roofs** – Maintain roofs and gutters free of all leaves and debris, especially during the late summer and fall.
- **Windows**—Except for well-maintained groundcover, no plants may be installed whose foliage, at maturity, is closer than 5 feet from a window.

## 3.1.3 Landscaping on Homeowner Lots

### *3.1.3.1 Approval Process*

Design Committee approval **<u>is required</u>** for Homeowner landscape projects that meet any of the following criteria:

- Involves more than 25% of the E-1 property
- Shrub removal in more than 10% of the E-2 zone
- Potential for large visual impact when viewed from street, path, or nearby property (e.g., dense plantings, many supports, or cages around plants, visible coating applied to any plant)
- Planting of any tree or vine
- Planting of any shrub that has the potential to block Significant Views or View Corridors.
- Removal of any living tree over 6 feet in height (in either E-1 or E-2); a no-cost Fast Track application is available for non-Significant trees
- Topping of any tree
- Installation of large (over 2 feet in diameter) rocks or boulders or a visible swath of rock materials.
- Installation of rock or gravel materials for fire safety in the 0–5' zone around a structure; a no-cost Fast Track application is available.
- Installation of any planting structure
- Installation of any ornamental statuary or benches if placed on the ground

Design Committee approval **is not required** for the following:

- Replacing plants on E-1 property with same or similar plants on the APL (less than 25% of E-1 property), provided the plantings meet the fire risk management criteria and are not shrubs or trees that have the potential to block Significant Views or View Corridors
- Regular maintenance, such as pruning, irrigation, removing volunteer plants, or mulching
- Removal of plants less than 6 feet in height for purposes of fire safety or overall landscape health if this involves less than 25% of E-1 or 10% of E-2.

Whether or not an application for approval is required, please remember:

- Only plants on the APL (see Exhibit 3.1.1A) may be planted.
- All planting must follow the fire safe practices (See Section 3.1.2) as outlined in the Fire Risk Management Guidelines and be spaced so that at maturity, no foliage will be within 5 feet of a structure. There should be no plants under decks or cantilevered portions of structures.
- Avoid linear planting in a hedge-like manner.
- As noted in Section 3.1.1, Ranch landscaping should replicate naturally occurring vegetation patterns, should create a natural effect that integrates with adjacent open areas, and should not delineate property lines.

### *3.1.3.2 Homeowner Lots*

Homeowner lots consist of E-1 areas, which contain the building envelope and improved landscaping, and E-2 areas, which are maintained in a naturalistic state and provide habitat value. The E-1 area is where a homeowner may install approved plants, lighting, irrigation, hardscape or other improvements. It is not permitted to plant on or otherwise significantly modify E-2 land except with prior approval from the Design Committee and the Board.

Portola Valley Ranch was designed to minimize the negative ecological impacts of carving up wildlands. The E-2 areas of many homes are clustered together, forming unbroken open space with high habitat value. Fire

safety and ecological health can be balanced by carefully planning fuel reduction after consultation with the available resources, such as the Land Management Plan and the Fire Risk Management Guidelines. For example, invasive trees and shrubs should be targeted for first removal, and sensitive and listed species should be protected.

The homeowner is required to maintain the fire safety and ecological health of their lot (both E-1 and E-2). This may include, but is not limited to: controlling invasive plants, removing deadwood and reducing fire hazards, mowing, and preventing/reducing soil erosion.

### *3.1.3.3 Maintenance*

The PVR Land Management Plan offers homeowners resources and best practice guidance in managing their properties. Homeowners are strongly encouraged to regularly remove "volunteer" seedlings arising in areas where they pose a fire risk or have the potential to impair Significant Views or View Corridors. If a tree must be substantially pruned to conform to current best practices in fire risk management, it is recommended to consider removal instead. If an area consists of multiple crowded trees competing with each other, selected removal may be less expensive, and more sustainable over the long run than limbing up all the trees to comply with fire risk management guidelines. Plants less than 6 feet in height may be removed without Design Committee approval for the purposes of fire safety or overall landscape health (if less than 25% of E-1 or 10% of E-2). We recommend selective plant removal to create gaps between groups of plants, not clearing large areas of plants.

If a homeowner does not perform required maintenance (see Section 3.1.3.2) on their Homeowner Lot, the CC&Rs authorize the Association to do so and charge the homeowner the cost of such maintenance.

### *3.1.3.4 Planting Trees*

Homeowners must obtain Design Committee approval before planting any tree. The Design Committee will consider the anticipated size of the mature tree and the possible impacts on View Corridors, fire risk, and present and future Significant Views as well as proximity to houses, carports and paved surfaces. No tree may be planted within 10 feet of a sewer line. No tree or shrub may be planted in a location where its branches will inevitably grow to be within 5 feet of a structure.

Redwood, Bay, Douglas Fir, and Tanoak trees have been removed from the APL; therefore, requests to plant or replace any trees of these species will not be approved.

### *3.1.3.5 Tree Removal (live/dead) or Topping*

Design Committee approval is required for removal of any living tree over six feet in height; a no-cost Fast Track application is available for non-Significant trees.

Residents are asked to notify the Ranch Office (Notification Application) when they cut down or remove a dead tree. All branches/brush smaller than 8 inches in diameter should be removed as soon as possible to reduce the amount of available fuel. If a homeowner wishes to leave a fallen tree or dead standing tree on a homeowner lot for habitat purposes, the homeowner must file a no-fee Design Application asking for an exemption and neighbors will be notified.

A Town ordinance also requires a separate Town permit for the removal of any Significant Tree, dead or alive. (see Exhibit 3.1.3.5) Some homes on the Ranch have inherited non-native, invasive trees (pines, hawthorns, cotoneaster, olive) that were planted by previous owners. While the rules for the removal of such trees are the same as for a native tree, removing non-natives is encouraged to protect habitat values. See Exhibit 3.1.1B on Invasive Species for more detail.

Topping of trees is not encouraged as it can damage the aesthetic of the natural landscape, the health of the tree, and the safety of those nearby. However, topping may be allowed in limited cases with prior Design Committee approval. Tree topping generally refers to removing whole tops of mature trees or cutting large branches/trunks from the top without regard to which branch is the central leader. This may be done to preserve a view or simply to reduce tree height, but removing the tree should be considered instead of topping. Topping a conifer generally consists of cutting into the main trunk. Topping a broad-leaved tree involves cutting all large branches to the same height rather than shaping around the tree's natural form. The Landscape Committee welcomes the opportunity to work with residents to achieve the best pruning solution for the health of the tree and the view objectives of the homeowner. Regular maintenance pruning such as crown cleaning, deadwood removal, and limbing up does not require Design Committee approval. Pruning best practices, including when to safely cut which tree species, are addressed in the Land Management Plan.

### *3.1.3.6 Preservation of Significant Views and View Corridors*

One of the considerations for approving or denying any Design Committee application for Landscaping is whether such application will affect a Significant View or View Corridor as those terms are defined in the glossary. (See Exhibit 3.1.3.6)

### *3.1.3.7 Restoration of A Significant View*

A homeowner who wishes to obtain a recommendation for a remediation plan from the Design Committee for restoration of a Significant View should submit an application to the Design Committee. The preliminary requirements, procedure and factors that the Design Committee is required to consider for an application for a Remediation Plan are set out in Exhibit 3.1.3.6.

The Association has no responsibility other than to make a recommendation or reject an application for a recommendation, and no authority to enforce any recommendation for restoration of a Significant View on homeowner property.

### *3.1.3.8 Preservation of View Corridors*

Trees and shrubs on Association Property that are found to be blocking View Corridors may be removed with Board Approval and Homeowner notification. The Board may request a homeowner to remove or prune trees and shrubs on homeowner property that have grown to block such a View Corridor. The Association has no responsibility other than to make a recommendation or reject an application for a recommendation for restoration of a View Corridor.

### *3.1.3.9 Irrigation Systems*

Design Committee approval is not required for installation of irrigation systems. In designing any irrigation system, a homeowner should take into account the unique watering requirements of California native plants in general, and their own designed landscape in particular. Irrigation systems should be checked regularly for leaks and malfunctions, and should follow present-day best practices. For more information, please contact a member of the Landscape Committee.

### *3.1.3.10 Mulching Guidelines*

The guidelines are attached as Exhibit 3.1.3.10. Homeowners do not need to obtain Design Committee approval to apply mulch; however, all mulching must follow the guidelines. For fire safety, no mulch should be within 5' of a wood-sided structure, and the depth of mulch and accumulation of leaf litter should be less than 3" within 30' of the structure or 15' from the roadside edge.

### *3.1.3.11 Use of Rocks and Boulders in Landscaping*

With Design Committee approval, earth color stone or gravel may be applied in select sections around structures up to a maximum width of 5 feet from the foundation, provided it is kept free of weeds and debris. The gravel/rock should be rough in texture generally monochromatic or all rocks in the same general color tone, and a neutral color compatible with earth or other landscape tones (*e.g.*, tans, grays, brown). These materials may also be used in areas under decks and cantilevered portions of structures, including carports and garages.

It is generally simplest, easiest to maintain, and most compatible with our surrounding vegetative patterns to have bare ground in the 0-5' zone. However, if gravel is to be applied in select sections (generally not the full perimeter) around a structure, the goal is to have the gravel integrate and appear as natural as possible. Where the ground is sloped, terracing or edging can be used to prevent gravel from moving downslope. However, the use of border edging should be limited, and visibility minimized to avoid creating a strong delineated pattern. The installation of gravel and any associated border edging should strive to integrate with the surrounding vegetative areas in keeping with the overall Ranch aesthetic.

A no-cost Fast Track application is available for the use of rock or gravel materials for fire safety in the 0–5' zone around a structure. See Exhibit 3.1.3.11 for guidance on landscaping in this zone. (See also Section 3.5.2.8, especially for the installation of solid appearing pathways with flat stone "pavers" (or fragments of such) or other types of hardscape).

In addition to their use as a non-combustible material in the 0–5' zone, natural boulders and rocks have several beneficial functions in the native plant garden. They are non-combustible, provide micro-habitat zones for small animals, and help retain moisture and protect plants. Rocks and boulders should act as accents to plantings and have a rough, natural appearance. They should be neutral in color and must be sufficiently buried to appear anchored. The installation of large (over 2 feet in diameter) rocks and boulders, OR a visible swath of rock materials requires Design Committee approval.

### *3.1.3.12 Dry Creek Beds*

Small rocks and cobbles may be used by homeowners to line dry creek beds and drainage courses. These must follow the natural creek beds and drainage courses and must be capable of functioning as a conduit in times of heavy rain.

### *3.1.3.13 Landscape Pathways and Steps*

Pathways or steps around structures intended to facilitate navigation of sloped paths may be installed without Design Committee approval. Such pathways or steps may be done with infrequently spaced stepping stones of redwood rounds, up to 8"x8" lumber, dark colored stepping stones, tree bark or other dark natural materials. Residents should keep in mind the flammability of these materials (*e.g.*, the finer the tree bark, the more flammable).

Hardscape (*e.g.*, solid appearing pathways) is discussed in Section 3.5.2.8.

### *3.1.3.14 Containers*

A container (different from a planting structure) is a free standing, self-contained box, tub, basin or other vessel with sides and a bottom not exceeding 10 square feet of planting surface and capable of containing the entire root system of the plant. Plants in containers located on decks, patios and walkways do not require Design Committee approval and may include plants not on the APL as long as such plants are not invasive or noxious weeds. For more information on the difference between non-native plants and noxious weeds see Exhibit 3.1.1B or contact the Landscape Committee. For fire safety, containers with plants should not be placed next to windows or underneath overhanging eaves or soffits.

Containers may not be placed on or in the ground. Vines must be maintained in a fire-safe manner. For more information on fire-safe vines, see Section 3.1.2.

#### *3.1.3.15 Planting Structures*

Any Planting Structure must be approved by the Design Committee and should contain only plants listed in the APL. Planting structures should use materials specified in the Design guidelines (See Exhibit 3.1.3.15)

#### *3.1.3.16 Ornamental Statuary and Benches*

Ornamental statuary and benches (stone, concrete, metal, wood, composite, etc.) must have Design Committee approval if placed on the ground. The approved bluebird boxes are exempt from this requirement. Statuary is permitted on decks, walkways, and patios.

#### *3.1.3.17 Personal Agriculture*

Preserving the natural landscape of the Ranch by replicating the vegetative patterns of the surrounding hillsides was an important consideration by the Town in authorizing the development of Portola Valley Ranch. Personal agriculture is facilitated on the Ranch through the community garden and orchard. The community garden offers individual garden boxes with community water, built-in timed watering systems, and protection from deer and rodents. Any homeowner interested in growing fruit trees can join the Orchard Committee which nurtures existing trees in the orchard near the Ranch House and selects new trees to be planted. In addition, in accordance with the Design Guidelines, residents can grow lemon trees, herbs, tomatoes, etc. in containers on their decks and patios. If a homeowner finds that their needs for personal agriculture are not met with existing Ranch facilities, they are encouraged to contact the PVR office.

#### *3.1.3.18 Cages Around Plants*

In keeping with the PVR vision of landscaping creating a natural effect that integrates with adjacent open areas, cages around plants for protection from wildlife should be used sparingly, be as inconspicuous as possible, and removed as soon as possible. The PVR Approved Plant List (APL) indicates which plants are likely to be browsed by deer.

- Use deer repellant spray rather than cages whenever feasible (especially for small plants).
- Limit plantings that require cage protection so there are no more than six cages on a property that are visible from a street, path, or nearby property.
- Each cage should be sized in diameter and height to accommodate only 1 year's growth of the plant.
- Additional smaller cages may be used to facilitate establishment of plants (i.e., removed within a few months) and sized accordingly.
- Cages should be dark wire (e.g., black, dark brown, dark green) with a non-glossy finish.
- Only consider caging plants listed in the APL as "often" or "sometimes" browsed by deer, and plan to remove a cage as soon as some of the plant is tall enough to avoid browsing.
- Wildlife can become entangled in plastic deer netting, so wire cages are preferable.

### 3.1.4 Landscaping and Maintenance of Association Property

The Landscape Committee, in conjunction with the Fire Risk Management and Design Committees, provides resource management and ecological oversight of Common and Association lands. Landscaping on Association Property should be done in accordance with best ecological practices, follow the original design concept and

comply with all PVR rules and regulations. The Board has the sole authority to approve major landscaping changes on Association Property based upon recommendations from the Landscape Committee and Design Committee.

Major, highly visible, or large-scale landscaping on Association Property is subject to notification of all homeowners and Board approval. Dead trees on Association Property may be removed without resident notification. Requests to leave a dead standing tree on Association Property for habitat purposes must go to the Board.

The planting on Association Property of any tree as well as any shrub with the potential to block Significant Views or View Corridors must be submitted to the Design Committee before submission to the Board for approval.

Homeowners may not landscape, prune or remove trees, shrubs or plants on Association Property.

# *Exhibit 3.1.1A—Approved Plant List*

A copy of the current APL may be obtained from the Ranch Office or found on the PVR website.

**Introduction to Approved Plant List.**

### *3.1.1A.1 Native plants, non-native plants, and invasive weeds*

The Approved Plant List only applies to plants that are to be installed in the ground at PVR. Some non-native plants (not listed on the APL) may be used in pots or other solid planting containers placed on decks or patios. See Section 3.1.3.15 and Exhibit 3.1.1B. Please note: As stated in Section 8.5 of the CC&Rs, invasive plants are not allowed anywhere on Portola Valley Ranch.

### *3.1.1A.2 Explanation of selected categories*

In the APL, there are columns that give more information about each plant, such as sun and water needs. Columns that may not be immediately self-evident are explained below.

- Botanical name: Latin name according to The Jepson Manual: Vascular Plants of California, Second Edition.
- Former name: The Jepson Manual changed many plant names recently. Former names are still being used by some plant professionals and are listed here for reference, if applicable.
- Locally native: Plants that occur naturally in our local ecosystems of grassland, chaparral, riparian, and woodland. Reference sites included, but were not limited to, Jasper Ridge Biological Reserve and Edgewood County Park. Plants from ecosystems that do not naturally occur at PVR, such as coastal scrub or redwood understory, were not included. Plants from ecological analogues in Santa Clara or Alameda were occasionally included if appropriate. Residents are encouraged to use locally native plants as they may provide higher habitat value and be better adapted to our unique landscape challenges.
- Local habitats: Grassland (sunny and open), Chaparral (sun to partial sun, rocky, sloped), Riparian (streamside, at least seasonal moisture, usually shady), and Woodland (dry shade, under oak canopy). This information is listed to help residents select plants naturally adapted to their particular site conditions. As there are dozens of ecosystems in California, many of which do not occur here, only local habitats are listed. To find out what habitat occurs on your lot, contact the Landscape Committee.
- Field notes: This column will be updated regularly to provide updated information from the unique PVR landscaping experience.

# *Exhibit 3.1.1B—Invasive Plant Guidelines*

Invasive plants (noxious weeds) are introduced species that have the ability to thrive and spread outside their natural range. These plants are characteristically adaptable, aggressive and have a high reproductive capacity.

Invasive plants can alter ecosystem functions such as nutrient cycles, hydrology and wildfire frequency. They outcompete and exclude native plants and animals, and may hybridize with native species. Some invasives, such as French broom, form tall stands of dead vegetation thereby increasing wildfire risk. Noxious weeds use up limited available soil moisture negatively affecting indigenous plants

The ecological health, habitat value and beauty of Portola Valley Ranch is dependent on controlling listed noxious weeds and promoting local natives.

**Part of the maintenance of homeowner lots is the control of invasive plants and removal of non-natives.** (See Section 3.1.3.3)

**High priority noxious weeds found at Portola Valley Ranch and in surrounding areas:**

- French broom, Genista monspessulana
- Stinkwort, Dittrichia graveolens
- Yellow starthistle, Centaurea solstitialis
- Harding grass, Phalaris aquatica
- Italian thistle, Carduus pycnocephalus
- Bull thistle, Cirsium vulgare
- Fennel, Foeniculum vulgare
- Invasive tree-like shrubs: hawthorn – Craetagus monogyna, cotoneaster – Cotoneaster sp., and European olive – Olea europea
- Various invasive annual grasses such as foxtail – Hordeum murinum, ripgut brome – Bromus diandrus, and wild oat – Avena sativa

Some noxious weed species are still sold in nurseries and hardware stores. These include:

- Mexican feathergrass, Stipa tenuissima
- Fountain grass, Pennisetum sp.
- Periwinkle, Vinca sp.
- Saint Johnswort, Hypericum sp.
- Pride of Madeira, Echium sp.
- Three cornered leek, Allium triquetrum
- Various spurges, Euphorbia sp.
- Heavenly bamboo, Nandina domestica
- Mexican daisy, Erigeron karvinskianus
- Common fig, Ficus carica

As per the CC&Rs, no noxious weeds are permitted anywhere on Portola Valley Ranch. Lists of invasive plants are produced by California Invasive Plant Council, California Department of Fish and Wildlife, and other authorities.

For more information, visit the web site of Cal-IPC, The California Invasive Plant Council at http://www.cal-ipc.org.

The Bay Area Early Detection Networks (BAEDN) also lists noxious weeds.

# *Exhibit 3.1.3.5—Significant Tree Removal*

**Town Approval Required**—In addition to Design Committee approval, a Town ordinance also requires approval for the removal of "Significant Trees"—dead or alive.

*Significant trees are defined to be ones described below which have a trunk or multiple trunks with a total circumference (C) or diameter (D) greater than the size indicated measured 54 inches above mean natural grade. For California Bay Laurel, if multiple trunk, measurements pertain to the largest trunk.*

| | **(C)** | **(D)** |
|---|---|---|
| **Coast Live, Black and Valley Oaks** | 36" | 11.5" |
| **Blue Oaks** | 16” | 5” |
| **Coast Redwood** | 54" | 17.2" |
| **Douglas Fir** | 54" | 17.2" |
| **California Bay Laurel** | 36" | 11.5" |
| **Big Leaf Maple** | 24" | 7.6" |
| **Madrone** | 24" | 7.6" |

# *Exhibit 3.1.3.6—Preservation of Significant Views and View Corridors*

**Purpose**

This process recognizes that the Significant Views contribute materially to our living environment and give pleasure to the residents of the Ranch. Therefore, a Homeowner whose Significant View is adversely affected is entitled to pursue a remediation process. This process recognizes that most houses at the Ranch have been sited to take advantage of views available when constructed. The purpose of this process is to provide an equitable method to assist homeowners and/or neighbors to preserve Significant Views, to continue the enjoyment of their views and to preserve the natural beauty of the setting into which our homes have been placed. This process is intended to foster a reasonable balance amongst views, privacy and landscaping and to encourage neighborliness in problem solving.

**Significant Views**

A Significant View is a view from a home's rooms or decks where residents spend substantial time that includes a distant view of: (a) landmarks, (b) unique features and vistas such as Windy Hill, Coalmine Ridge, Foothill Park, or San Francisco Bay, or (c) San Francisco and other Bay Area towns where lights are visible at night. A view of a nearby building and/or a landscaping feature is not a Significant View.

**Remediation Process**

A Significant View can only be preserved up to the level that existed at the time the Homeowner purchased his or her home. A Homeowner will need to provide evidence to prove the extent of the Significant View that he or she is seeking to preserve. The Design Committee evaluation of proposed remediation will be based on; (1) the structural effectiveness in reducing the view obstruction; (2) the structural and biological effects of the remedial action on the landscaping and ecology; and (3) any adverse impact of the remedial action versus the benefits derived from the landscaping in question. Benefits to be considered include visual screening, soil stability, habitat value, shading, and the value of Significant Trees. Remediation shall be consistent with all Design Committee Procedures, fire safety vegetation management, and Town requirements.

**Landscaping on a Neighbor's Property**

Any Homeowner who believes his or her Significant Views have been or will be impaired by landscaping on a neighbor's property should first attempt to work with the neighbor whose landscaping is causing or will likely cause a diminution of the Significant View to develop a remediation plan. If the proposed remediation is acceptable to all affected parties, then there is no need to file an application to the Design Committee provided the remediation plan does not require Design Committee approval as set forth elsewhere in this Section 3.1, and provided further that it does not require Town approval. If, however, there is no agreement between the parties then the party seeking remediation may submit a request for remediation to the Design Committee for consideration.

A remediation plan may involve trimming, thinning, windowing or removal of trees (except as otherwise provided here) or other landscaping to address the problem. However, a Significant Tree as defined by the Town of Portola Valley, as set forth in Exhibit 3.1.3.5 may not be removed without the approval of the Design Committee and the Town of Portola Valley. Heritage trees, such as oak trees that were growing before PVR development, have a special significance to the Ranch residents and should be preserved and protected by the homeowners and the Association. Therefore, such oak trees will not be removed solely to restore a Significant View.

As part of a remediation plan the Design Committee may propose replacement planting for the purpose of restoring visual privacy. A remediation plan recommended by the Design Committee and agreed to by the affected parties may be implemented without further review unless Town approval is required.

If the affected parties do not agree on the remediation plan recommended by the Design Committee then either party may appeal the Design Committee recommendation to the Board of Directors.

If one of the affected parties disagrees with the Board recommendation, it may take any appropriate lawful action; however, the Association encourages the parties to seek a remedy through mediation or arbitration. The Association does not have the authority to enforce any remediation plan. Any homeowner seeking to enforce his or her right to significant view protection as to a neighbor must defend, indemnify and hold harmless the Association, its Committees, Officers, Directors and Members.

**Landscaping on a Homeowner's Property**

If a Significant View has been impaired by trees wholly on one's own property, then the homeowner needs to follow the guidelines on the remediation process outlined herein and only submit an application to the Design Committee if the remediation requires any tree removal or topping.

**Landscaping on Association Property**

Any Homeowner who believes his or her Significant Views have been impaired by vegetation on Association property may submit a request for remediation to the Design Committee. The Design Committee, in consultation with the Landscape Committee, will make a recommendation to the Board, which will review the request and the proposed remediation plan. If the Board approves the remediation plan and the Homeowner requesting remediation agrees to it, the Association will implement the plan as approved and the implementation will be managed by the Landscape Committee. The cost of the remediation will be borne by the Homeowner requesting the remediation.

**Allocation of Remediation Costs**

In all cases the remediation cost is borne by the party who is seeking to restore its Significant View. Managing the execution of the remediation plan is the responsibility of the owner of the property where the work is to be done, unless there is an agreement between both parties for some other arrangement.

**View Corridor**

An open space between, over, or through buildings and/or landscaping that provides views of a distant vista of natural beauty.

**Existing Vegetation on Homeowner's Property**

The board may request a homeowner to remove or prune trees and shrubs on their lot that have grown to block a View Corridor. Such removal or pruning may only be done with homeowner permission and at the expense of the Association.

# *Exhibit 3.1.3.10—Mulching Guidelines*

**General Policy**

All landscape efforts must be consistent with minimal impact on the natural setting. Mulch is a useful tool for many California native plant landscapes. It provides nutrients, aids moisture retention and deters weed growth. Mulch applications are discouraged that result in an artificial carpeted appearance or a definite property line between neighbors. For best plant health, never apply mulch right up to the trunk of a plant; always maintain at least 5 inches separation. Mulching right at the trunk or center stem promotes rot and disease.

For fire safety, no organic (*e.g.*, wood, bark) or other combustible mulch should be within 5’ of a wood-sided structure. Elsewhere, apply mulch no more than 3” thick.

**Types of Mulch**

Mulch applied at Portola Valley Ranch should be “arbor mulch” or wood chips made from chipped oak, fir, or pine, or bark chips (aka “bark nuggets”). Sometimes there is a supply of this free to residents; contact the PVR Office for location. Shredded or ground barks are not allowed as they actually repel water and convey an unnatural appearance. Tinted, dyed, or painted mulches are likewise not allowed. As specified in Section 3.1.3.11, with Design Committee approval earth color stone or gravel may be used instead of organic mulch in the 0–5’ zone surrounding the home.

Garden supply centers often carry various types of mulch, which may be sold under different names or specifications. While it’s not possible to list every single brand, here are a few of the most common:

| | | | |
|---|---|---|---|
| **Yes: Natural-looking chips** ✓ | Wood chips, arbor mulch, bark chips or nuggets | Mini mulch, mini bark | Playground fiber |
| **No: Artificial-looking products** X | Shredded bark, Ground bark | Gorilla fur, Redwood Bark | Tinted mulch |

# *Exhibit 3.1.3.11—Landscaping in the 0–5' Zone*

**General Policy**

The 0–5' zone around a structure is the most important part of a homeowner's landscape for fire safety because embers carried in by wind can ignite debris and vegetation near the structure which can ignite wood siding and decks, and break windows. This zone must be free of mulch and flammable debris. Woodside Fire requires that this zone be free of vegetation with the exception of groundcovers consisting of irrigated Approved Vegetation (defined by Ordinance) if they do not form a means of readily transmitting fire as determined by the fire code official, and appropriately pruned established trees.

**Options**

There are several options for this zone; homeowners may want to choose a combination of:

- **Bare ground.** *[Design Committee approval not required]*
  This option is easy and low cost.
- **Rocks or gravel.** *[Design Committee approval required; no-cost Fast Track application]*
  There are many attractive options for rock/gravel material in this zone. The Landscape committee and staff have selected and installed examples near the Ranch House (see photos and discussion below). A collection of additional samples that the Design Committee agrees are consistent with the natural environment around PVR is available near the Fitness Center as further examples. These are provided as examples only; other gravel/rock choices may be proposed keeping in mind the guidance that such gravel/rock should be rough in texture, generally monochromatic or all rocks in the same general color tone, and a neutral color compatible with earth or other landscape tones (*e.g.*, tans, greys, brown).

**Considerations**

- **Implementation**—Bare ground is the simplest to implement and maintain and may be the best option in many locations. Homeowners may choose to have bare ground in all locations within 5' of structures or a combination of bare ground in some areas and rocks, gravel, and/or other hardscape in other areas. Below are some photos of rock/gravel installations around the lower pool house and fitness center. A thick layer of rock/gravel (2" thick or more) will discourage weeds. Installing landscape cloth beneath the rocks/gravel will also reduce plant growth, but the cloth degrades over time and can result in visible pieces if thick rock coverage is not maintained. Rock/gravel is not intended to be applied around the full perimeter of a structure. (Note: the demonstration area around the Fitness Center that creates a "moat" is intended to maximize the display of multiple samples of rock/gravel. It is not intended to support application of rock/gravel around the entire structure.
- **Maintenance**—Grasses and weeds, if present in the 0–5' zone, should be mowed, weed whacked, or pulled before fire season. Leaves and other debris should be regularly raked or blown out of the zone during fire season. This might be difficult if smaller gravel is installed, as a blower will likely blow the gravel around. Use of rock/gravel that is ¾" in diameter or greater will be easier to keep clear of leaves and debris.
- **Slopes**—If erosion is not an issue, it is simplest to have bare ground on slopes. Rocks or gravel will tend to move downslope unless constrained. Staff have implemented a terraced solution along the lower pool house using large lumber and ¾" rock (photo below). Large dimension lumber is fire resistant, so it is acceptable to place it close to a structure. Other approaches would be the use of larger rocks embedded in the ground to anchor the smaller rock, or use landscape edging material to create terraced sections. However, any form of edging should be limited and visibility minimized.

- **Erosion**—If erosion is an issue, embedding larger rock (roughly 6–12” diameter) in the areas of concern will help. The remainder of the ground could be bare dirt or terraced as discussed above. For further advice, contact the landscape consultant.
- **Walking surface**—If the surface is not sloped, bare earth and many of the rock/gravel and other stepping stone options are fine as walking surfaces. Care should be taken for walking surfaces on a slope. If possible, terracing (discussed above) is a good approach. See Section 3.5.2.8 for solid appearing pathways using flat stone “pavers” (or fragments of such) which requires a Standard Application.
- **Rodent exclusion**—If rodent burrowing around a foundation is a problem, you can discourage it by maintaining a clean, vegetation-free area around building foundations, conducting regular, close mowing of vegetation, and laying 1 inch diameter or larger gravel in a band at least 2 feet wide and 6 inches deep in select sections adjacent to foundations.[1] Any holes leading to the foundation or other potential routes of incursion can be protected with wire mesh. There are many resources available for best practices in rodent exclusion; refer to the Land Management Plan for more details.

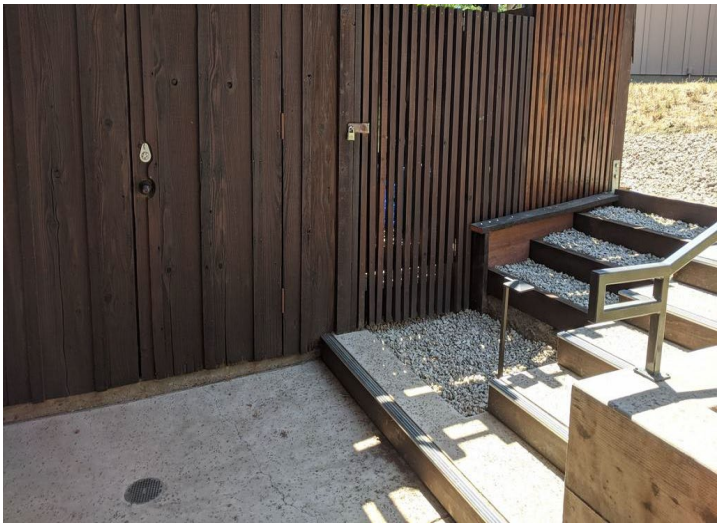

[1] Badzik, B., C. L. J. DiSalvo, D. E. Buttke, and M. F. Chase; 2014. Rodent Exclusion Manual, Mechanical Rodent Proofing Techniques: a training manual for National Park Service Employees. Natural Resource Report September 2014. National Park Service, Fort Collins, Colorado. https://www.nps.gov/orgs/1103/upload/NPS-Rodent-Exclusion-Manual-Mechanical-Rodent-Proofing-Techniques_2019.pdf

## *Exhibit 3.1.3.14A—Example: Redwood Rounds for Pathways*

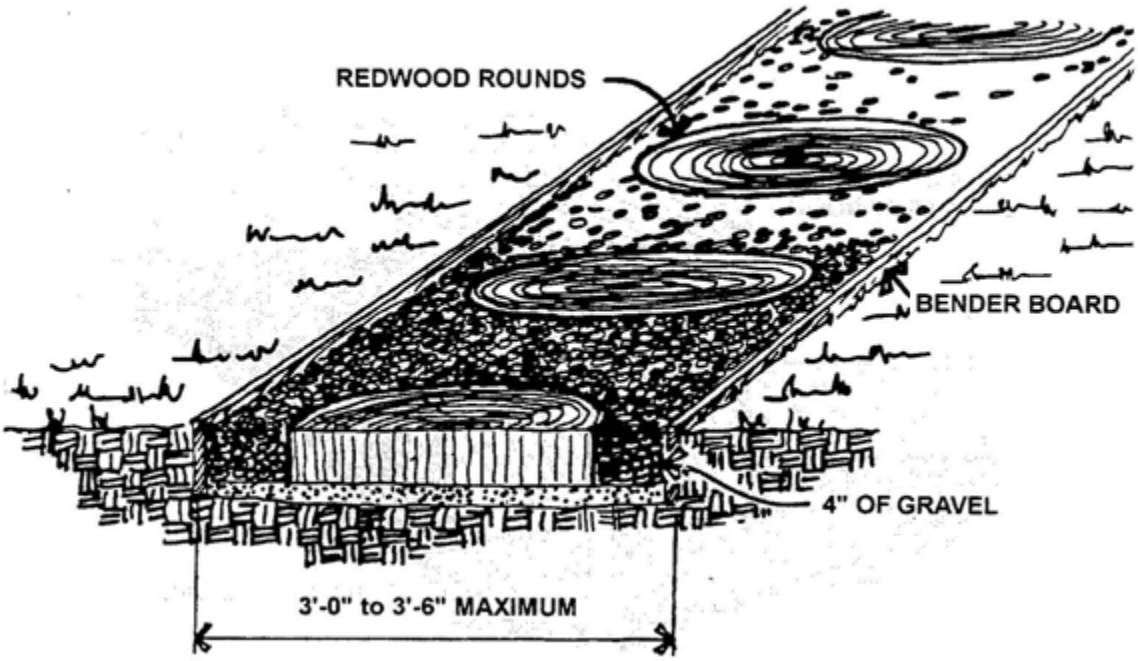

# *Exhibit 3.1.3.14B—Example: Timbers for Pathways*

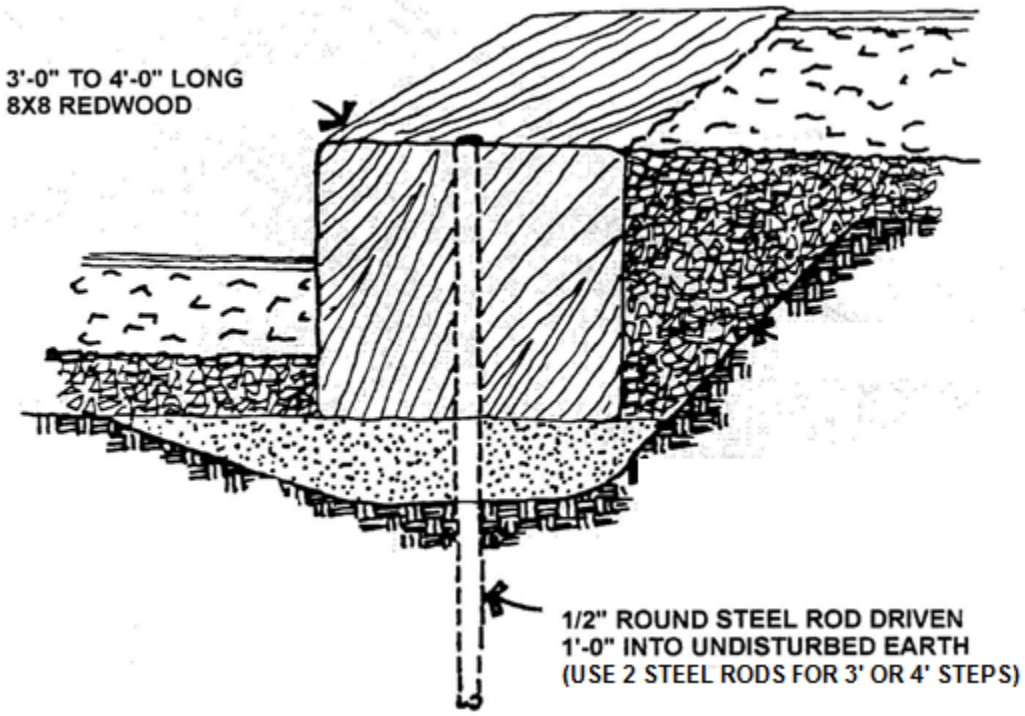

# *Exhibit 3.1.3.15A—Large Wood Planting Structure*

**NOTE: Must be constructed with non-combustible or ignition-resistant materials**

*NOTE: THIS PLANTER DOES NOT MEET THE NECESSARY DEFINITION THAT WOULD ALLOW THE INSTALLATION OF NON-NATIVE PLANTS.

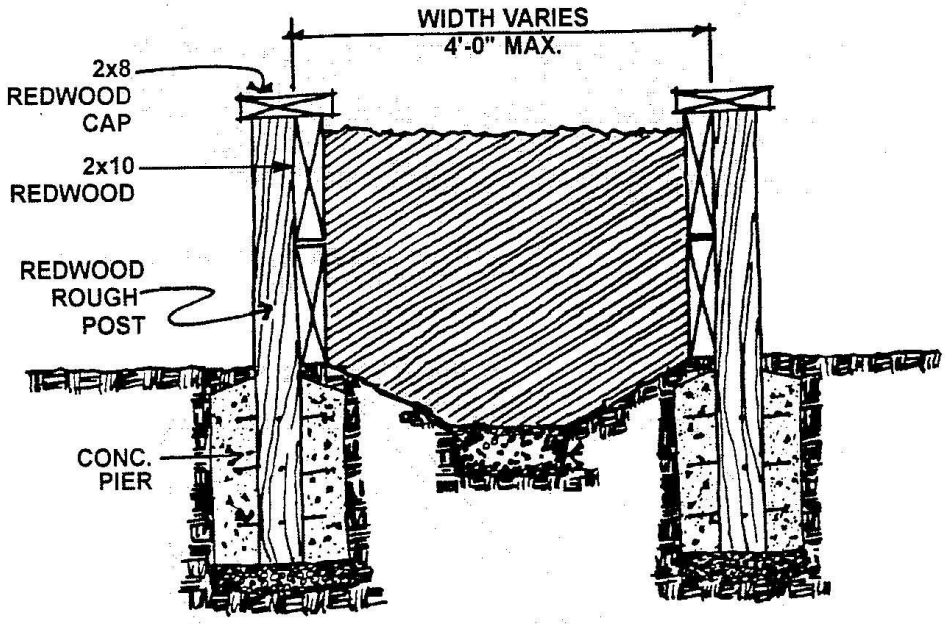


NOTE
ALL WOOD SURFACES TO BE TREATED WITH COPPER NAPHTHENATE.

# *Exhibit 3.1.3.15B—Small Wood Planting Structure*

NOTE: Must be constructed with non-combustible or ignition-resistant materials

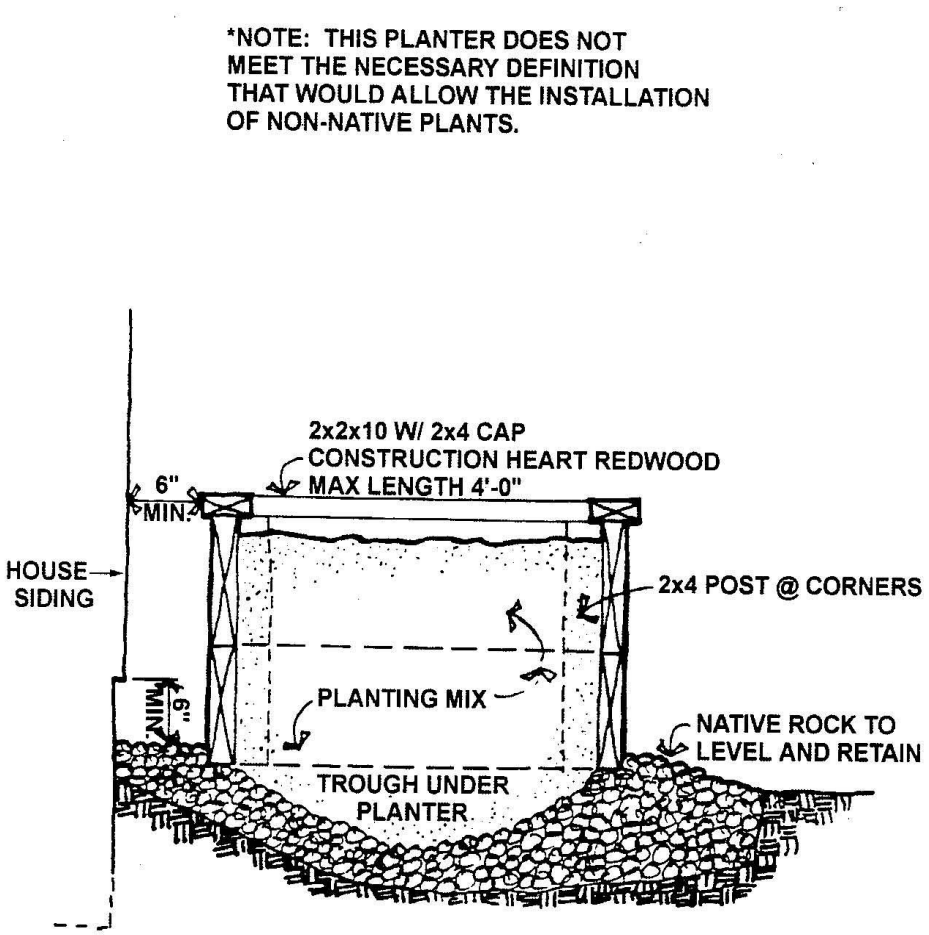

# 3.2—Exterior Colors

## 3.2.1 General Design Concept

### *3.2.1.1 Acceptable Colors and Finish*

The design concept of the Ranch calls for a development where the houses blend into the natural environment. As a result, exterior color selection is key to the integration of our homes with the land and natural landscaping. This section addresses the acceptable colors and finishes for all exterior structural elements of a home. For exterior siding and sloped roofs in particular, please note that the Design Committee and the Town of Portola Valley has approved a list of acceptable colors that are generally earth tones and that have a light reflectivity value of less than 40%. Flat or matte finishes are generally required for most surfaces except in select situations as shown in the table below. Entry doors are the only surfaces that are allowed to have a satin or eggshell finish.

### *3.2.1.2 Variety of Colors*

To provide visual interest, there should be a variety of exterior colors selected for neighboring houses, particularly for cul-de-sacs. Design Committee approval will be influenced by existing home colors in the neighborhood so as to provide a variety of colors on the street while also ensuring visual harmony and the basic objective of blending with the natural setting. Homeowners may stain house or deck fascia a different color from that of the house siding. A third color may be used for the front door. In addition, consideration may be given to using a coordinating color to the house siding for trellises or decks/railings; depending on the site and/or design, this may minimize the sense of massing. Note that the same siding color and coordinating fascia color must be used on both the house and carport. (Certain colors that currently exist on the Ranch have been discontinued as an approved color, see Exhibit 3.2.3, and are grandfathered only for the original owner if they choose to repaint their house to match; any new owner must choose a currently approved color.)

### *3.2.1.3 Stain/Paint Types*

Stains (that carry a pigment that soaks into the surface) and paints (that carry a pigment that sits on top of the wood and require a primer) are allowed on the Ranch. In addition, wood shingles or natural wood exteriors may be finished with a clear sealer. Transparent stains are not allowed as they do not provide adequate protection from weather and sun. Semi-solid and semi-transparent stains are allowable only on certain surfaces (see Section 3.2.3). In most cases premium solid body stains and acrylic based paints are required. If a spray application is used, backrolling (*i.e.*, rolling the still wet stain/paint with a roller after spraying) is recommended. Except for stucco, all siding must be power washed prior to refinishing. The approval of any proposed stain/paint will be influenced by whether a uniform appearance can be achieved.

## 3.2.2 Approvals Required

### *3.2.2.1 Sample*

Applications for staining/painting require that a test sample of the proposed color at least 2’ x 2’ in size be painted on the house, carport or garage, ensuring that this sample may be viewed at eye level in full sun. The fascia sample must be on the same structure. If the house is badly weathered, the sample location should be selected to demonstrate that the stain/paint covers the weathered surface. This sample area should be prepared by power washing or by wire brushing and dusting with a dry brush prior to application of the color.

The sample must be marked with the name and number of the stain sample or the color intended to be matched.

#### *3.2.2.2 Design Committee Approvals*

The Design Committee must approve all exterior colors prior to their use. The application must also include a color sample painted on a 3-4" square of cardboard.

#### *3.2.2.3 Town and Design Committee Approved Colors*

The Design Committee and the Town of Portola Valley control color choices. To streamline the approval process, a list of approved colors (see Exhibit 3.2.3) was originally approved when the Ranch was first developed for (1) siding and suggested coordinating fascia colors, (2) front doors, (3) decks, and (4) shingle roofs. A color sample book of these approved colors is available for reference at the Ranch Office. Since approval of the color list, several paint/stain colors have been discontinued, paint formulations have changed, and changes to paint bases have resulted in the same "color" looking different from the original color. Residents can choose any manufacturer of paint, but should be aware that regardless of choice of manufacturer efforts to ensure an exact match may be required. Because of these ongoing changes, the Town has agreed that residents may propose to use a color not on the approved list provided the color is within the approved Ranch color palette (*i.e.*, the colors listed in Exhibit 3.2.3). Every effort should be made to find a color similar to an approved color, but slight variations may be approved provided the color and tone are within an acceptable spectrum of an approved color. It should also be noted that colors fade over time and thus any new application for paint/stains should match the original color as depicted in the color book, not the current color on the structure.

Colors originally included in the approved list (Exhibit 3.2.3) that were subsequently discontinued are grandfathered only for the original owner if they choose to repaint their house to match; any new owner must choose a currently approved color.

### 3.2.3 Guide to Approvable Materials, Reflectivity, Color

The following table outlines what stains/paint or materials are required for use on various structural elements. In addition, the finish or reflectivity and allowable colors are presented.

| STRUCTURAL ELEMENT | STAIN/PAINT MATERIAL | FINISH REFLECTIVITY | COLOR<br>* refers to Exhibit 3.2.3 |
|---|---|---|---|
| **HOUSE/CARPORT SIDING, TRIM, FASCIA, CARPORT INTERIOR** | | | |
| ▪ Wood shingles<br>▪ Natural wood siding<br>▪ Clapboard | ▪ Semi-transparent stain<br>▪ Semi-solid stain<br>▪ Solid-body stain<br>▪ Clear sealer | ▪ Flat/matte | ▪ Clear sealer acceptable<br>▪ Approved color palette* |
| ▪ T111<br>▪ Board and batten<br>▪ Grooved plywood | ▪ Solid-body stain<br>▪ Acrylic-based paint | ▪ Flat/matte | ▪ Approved color palette* |
| ▪ Stucco | ▪ Acrylic-based paint | ▪ Flat/matte | ▪ Approved color palette* |
| ▪ Concrete or fiber cement products (or other Class A rated products) | ▪ Un-stained and painted<br>▪ Pre-finished | ▪ Flat/matte | ▪ Samples to be approved by the Design Committee (to match approved color palette*) |

| STRUCTURAL ELEMENT | STAIN/PAINT MATERIAL | FINISH REFLECTIVITY | COLOR<br>* refers to Exhibit 3.2.3 |
|---|---|---|---|
| ▪ Trim (other than front door trim) | ▪ Solid-body stain<br>▪ Acrylic-based paint | ▪ Flat/matte | ▪ Same color as siding |
| ▪ House/Carport fascia | ▪ Solid-body stain<br>▪ Acrylic-based paint | ▪ Flat/matte | ▪ Approved color palette*<br>▪ Same color as siding or approved coordinating color* (darker than siding)<br>▪ Two board fascias may be one color tone apart |
| ▪ Underside of eaves | ▪ Solid-body stain<br>▪ Acrylic-based paint | ▪ Flat/matte | ▪ Same as siding or fascia |
| ▪ Carport Interior | ▪ Acrylic-based paint | ▪ Flat/matte | ▪ Siding color<br>▪ Ceiling (if visible) should be same color as siding, fascia or color to minimize visibility |
| ▪ Structural addition | ▪ Same as existing structure | ▪ Flat/matte | ▪ Exterior must be finished to match existing structure or entire structure must be refinished |
| **TRELLISES, ARBORS, RAILINGS, DECKS, FENCES** | | | |
| ▪ Wood trellises<br>▪ Wood arbors<br>▪ Wood trellis support posts | ▪ Semi-solid stain<br>▪ Solid-body stain<br>▪ Acrylic-based paint<br>▪ Left to weather | ▪ Flat/matte | ▪ Same color as siding or approved coordinating color*<br>▪ Left to weather |
| ▪ Metal trellises<br>▪ Metal support posts | ▪ Acrylic-based paint<br>▪ Anodized<br>▪ Powder coat<br>▪ Unfinished cable railing | ▪ Flat/matte | ▪ Same color as siding or approved coordinating color*<br>▪ Color to match any wooden trellis members<br>▪ Cable railing - unfinished |
| ▪ Wood railings (existing) | ▪ Semi-transparent stain<br>▪ Semi-solid stain<br>▪ Solid-body stain<br>▪ Acrylic-based paint<br>▪ Left to weather | ▪ Flat/matte | ▪ Same color as siding or approved coordinating color*<br>▪ Left to weather |
| ▪ Metal railings | ▪ Acrylic-based paint<br>▪ Anodized<br>▪ Powder coat<br>▪ Unfinished cable railing | ▪ Flat/matte | ▪ Dark gray, dark bronze, black<br>▪ Color to blend with natural environment<br>▪ Cable railing - unfinished |

| STRUCTURAL ELEMENT | STAIN/PAINT MATERIAL | FINISH REFLECTIVITY | COLOR<br>* refers to Exhibit 3.2.3 |
|---|---|---|---|
| ▪ Glass railings<br>▪ Glass supports | ▪ Glass<br>▪ Metal/wood supports | ▪ Glass (see Section below on "Glass")<br>▪ May not be mirrored | ▪ Glass – Clear; or if tinted, gray or bronze<br>▪ Supports should be matte finish |
| ▪ Wood deck surface | ▪ Clear sealer<br>▪ Semi-transparent stain<br>▪ Left to weather | ▪ Flat/matte | ▪ Approved color palette*<br>▪ Left to weather |
| ▪ Stone or Tile deck surface | | ▪ Flat/matte | ▪ Samples to be approved by Design Committee |
| ▪ Deck—manufactured materials simulating natural materials | | ▪ Flat/matte | ▪ Samples to be approved by Design Committee [generally natural in appearance, earth tones (brown or gray), medium to dark shade] |
| ▪ Wood deck support posts | ▪ Semi-transparent stain<br>▪ Semi-solid stain<br>▪ Solid-body stain<br>▪ Acrylic-based paint<br>▪ Left to weather | ▪ Flat/matte | ▪ Same color as siding or approved coordinating color*<br>▪ Left to weather |
| ▪ Metal deck support posts | ▪ Acrylic-based paint<br>▪ Anodized<br>▪ Powder coat | ▪ Flat/matte | ▪ Same as siding or approved coordinating color* |
| ▪ Deck fascia | ▪ Semi-solid stain<br>▪ Solid-body stain<br>▪ Acrylic-based paint | ▪ Flat/matte | ▪ Same color as siding or approved coordinating color* |
| ▪ Deck—underside if visible | ▪ Same as top side | ▪ Flat/matte | ▪ Same as siding, top side or left to weather, depending on site specifics |
| ▪ Fence—wood<br>▪ Privacy Screen—wood | ▪ Semi-solid stain<br>▪ Solid-body stain<br>Left to weather | ▪ Flat/matte | ▪ Color consistent with other structural elements of house<br>▪ If same style as the siding, same color as siding<br>▪ Privacy screen attached to house/deck, same color as siding or trellis (or left to weather if trellis is unstained) |
| ▪ Privacy Screen—metal | ▪ Acrylic-based paint<br>▪ Anodized<br>▪ Powder coat | ▪ Flat/matte | ▪ Dark color or color that blends with surroundings and house |
| ▪ Wire fencing (*e.g.*, dog run) | ▪ Wire mesh | ▪ Flat/matte | ▪ Dark color |

| STRUCTURAL ELEMENT | STAIN/PAINT MATERIAL | FINISH REFLECTIVITY | COLOR<br>* refers to Exhibit 3.2.3 |
|---|---|---|---|
| **FRONT DOORS, GARAGE DOORS, OTHER WOODEN DOORS. SLIDING GLASS DOORS, WINDOWS** | | | |
| ▪ Front Door—wood or metal | ▪ Acrylic-based paint<br>▪ Clear or wood colored varnish<br>▪ Powder coat | ▪ Flat/matte<br>▪ Eggshell<br>▪ Low sheen satin varnish | ▪ Approved color palette* |
| ▪ Overhead garage door | ▪ Solid-body stain<br>▪ Acrylic-based paint<br>▪ Powder coat | ▪ Flat/matte | ▪ Same as siding or one tone lighter or darker than siding to create interest and depth<br>▪ In some cases, an approved coordinating color* (*e.g.*, fascia) may be approved depending on location of garage relative to street and other homes |
| ▪ Other person entry door to garage or house (other than blind doors) | ▪ Solid-body stain<br>▪ Acrylic-based paint | ▪ Flat/matte<br>▪ Eggshell<br>▪ Low sheen satin varnish | ▪ Same as siding/garage<br>▪ If house is natural, doors must be left natural or stained a color of very low contrast to siding |
| ▪ Blind doors | ▪ Solid-body stain<br>▪ Acrylic-based paint | ▪ Flat/matte | ▪ Same as siding |
| ▪ Sliding glass doors<br>▪ Windows | ▪ Must meet glass requirements noted below<br>▪ Frames must be anodized metal, metal clad wood, or composite material that resembles metal or wood | ▪ Flat/matte | ▪ Frames - Bronze |
| **ROOFS, SKYLIGHTS, GUTTERS, FLASHING AND DOWN SPOUTS** | | | |
| ▪ Flat roof | ▪ Tar and gravel<br>▪ Torch down with granular surface<br>▪ Foam<br>▪ PVC/TPO<br>▪ Metal<br>▪ Solar (See Section 3.11) | ▪ None<br>▪ PVC/TPO (very low reflectivity) | ▪ Gravel: Gray or tan (very light tan or gray are not allowed)<br>▪ Torch down/Foam/PVC/TPO/Metal: Same as approved gravel colors or approved shingle colors<br>▪ Torch down seams must be sealed with matching granules<br>▪ Every flat roof on a property must be the same color and material |
| ▪ Sloping roof | ▪ Composite shingles<br>▪ Metal | ▪ None | ▪ Approved color palette*<br>▪ Every sloped roof on a property must be the same color and material |

| STRUCTURAL ELEMENT | STAIN/PAINT MATERIAL | FINISH REFLECTIVITY | COLOR<br>* refers to Exhibit 3.2.3 |
|---|---|---|---|
| | ▪ Solar (See Section 3.11) | | |
| ▪ Skylights | ▪ Glass | ▪ Glass (see Section below on "Glass"<br>▪ May not be mirrored | ▪ Clear, bronze, or gray<br>▪ Frosted or obscured glass must be a color compatible with, and not providing high contrast to, the roofing material<br>▪ All skylights must be the same color (unless partial replacement with flat glass combined with pre-existing grandfathered white acrylic skylights) |
| ▪ Skylight frames | ▪ Anodized<br>▪ Acrylic-based paint | ▪ Flat/matte | ▪ Bronze (to match window and door frames) or neutral gray<br>▪ Same as roofing material<br>▪ Hip and/or ridge frames (allowed only if required for structural reasons) must be bronze anodized |
| ▪ Skylight curbs | ▪ Acrylic-based paint | ▪ Flat/matte | ▪ Same as skylight frame, roofing material, or siding/fascia color |
| ▪ Roof flashing, vents | ▪ Acrylic-based paint | ▪ Flat/matte | ▪ Same as fascia if adjacent to fascia<br>▪ Same color as surrounding material or background<br>▪ Darker color choice is recommended |
| ▪ Gutters | ▪ Acrylic-based paint | ▪ Flat/matte | ▪ Same as fascia |
| ▪ Down spouts | ▪ Acrylic-based paint | ▪ Flat/matte | ▪ Same as surface behind down spout (*e.g.*, fascia/siding)<br>▪ If house is natural, color of fascia |
| ▪ Exterior sun screens on window/door/ trellis and frame/housing (See Section 3.4.2.6) | ▪ Metal or solar screen material (non-combustible encouraged) | ▪ Flat/matte | ▪ Color to minimize visual impact.<br>▪ If above trellis, color close to trellis<br>▪ If drop down valance from trellis, color compatible with siding or fascia<br>▪ For window/door shades, color should be dark brown, charcoal gray, black or color compatible with siding<br>▪ Dark colored anodized frame/housing |
| ▪ Skylight covers | ▪ Non-combustible material | ▪ Flat/matte | ▪ Similar to bronze skylight<br>▪ Similar to roof color |
| **GLASS** | | | |
| ▪ Windows<br>▪ Doors<br>▪ Glass inserts in doors<br>▪ Skylights | ▪ Non-mirrored glass<br>▪ Glass that changes from clear to opaque<br>▪ Obscure glass | | ▪ Clear; If tinted, gray or bronze only<br>▪ Clear glass required for carport windows that preserve a view corridor<br>▪ Obscure glass for privacy may be clear, white, bronze, gray or beige |

| STRUCTURAL ELEMENT | STAIN/PAINT MATERIAL | FINISH REFLECTIVITY | COLOR<br>* refers to Exhibit 3.2.3 |
|---|---|---|---|
| | | | ▪ *NOTE: Most "clear" glass includes some light tint for reflectivity and heat protection. When doing a partial window/door replacement, ensure similar color tones for compatibility,* |
| **MISCELLANEOUS** | | | |
| ▪ Step stripes (may not be more than 1½" wide on top horizontal edge) | ▪ Acrylic-based paint | ▪ Reflective paint permitted | ▪ High contrast color |
| ▪ Gas meters, cable boxes, solar inverters, electrical conduits, any component needed for a utility or solar installation, electric car chargers, other auxiliary structures (See Section 3.6) | ▪ Acrylic-based paint<br>▪ Unfinished if gray or unobtrusive neutral color<br>▪ Transparent vinyl wrap may be considered for some components to darken appearance | ▪ Flat/matte | ▪ Painted same as siding<br>▪ Left natural if gray or an unobtrusive neutral color (not light colored), depending on location and visibility<br>▪ Transparent vinyl wrap should be gray or other dark color<br>▪ NOTE: structural housing matching the background wall may be recommended as screening depending on location to minimize off-site impacts |
| ▪ Garbage enclosures | ▪ Wood siding<br>▪ Metal privacy screen | ▪ Flat/matte | ▪ Wood: painted same as siding<br>▪ Metal: painted to match siding, dark color or color that blends with surroundings and house |
| ▪ Window and front door bug screens | ▪ Metal | ▪ Flat/matte | ▪ Dark gray<br>▪ Black |
| ▪ House numbers | ▪ Wood<br>▪ Metal | ▪ No more than low reflectivity | ▪ Left natural (wood)<br>▪ White, black or fascia color (colors to improve visibility encouraged)<br>▪ Metal colors<br>▪ Any background behind number must blend with color of siding |

# *Exhibit 3.2.3—Approved Exterior Colors*

## APPROVED COLOR TABLE

| HOUSE SIDING COLORS | SUGGESTED COORDINATING FASCIA COLORS |
|---|---|
| 1. Guardsman K39 – 3 | 7, 81, 11, 83, 95 |
| 2. Noble House N19 – 3 | 7, 81, 95 |
| 3. Olive Gray K40 – 3 | 7, 11, 95 |
| 4. Lindenwood N20 – 3 | 7, 11, 81, 95 |
| 5. Tarragon K20 – 3 | 6, 7, 15, 83, 95 |
| 6. El Dorado Tan 201 | 5, 7, 11, 12, 15, 83, 95 |
| 7. Falcon AA18 | 1, 2, 3, 4, 5, 6, 12, 15 |
| 9. Nutmeg E39 – 3 | 11, 13, 95, |
| 11. Cobblestone AA16 | 2, 3, 4, 6, 95 |
| 12. Sepia AA17 | 3, 7, 95 |
| 13. Saddlebrown 200 | 3, 4, 5, 6, 95 |
| 15. Chadbury P20 – 3 | 2, 6, 7, 11, 79, 95 |
| 16. Loam 413 | 1, 2, 6, 13, 95 |
| 79. Cabot Sandstone | 11, 13, 95 |
| 80. Cabot Chestnut Brown | 13, 95 |

# *Exhibit 3.2.3—Approved Exterior Colors (Continued)*

## HOUSE SIDING COLORS

This list of approvable colors for siding, fascia and doors has been approved by the Town of Portola Valley ("approved Ranch color palette"). Over time, colors have been discontinued, manufacturers have changed, paint formulations have changed, and changes to paint bases have resulted in the same "color" looking different from the original color. **Residents can choose any manufacturer of paint, but should be aware that regardless of choice of manufacturer efforts to ensure an exact match to approved original color samples (not to faded colors on existing structure) may be required**. Because of these ongoing changes, the Town has agreed that residents may propose to use a color not on the approved list as long as the color is within this approved Ranch color palette. Every effort should be made to find a color similar to an approved color, but slight variations may be approved provided the color and tone are within an acceptable spectrum of an approved color. Colors noted below as "discontinued" are grandfathered only for the original owner if they choose to repaint their house to match; any new owner must choose a currently approved color.

**Kelly Moore**

1. Guardsman K39 – 3
2. Noble House N19 – 3
3. Olive Grey K40 – 3
4. Lindenwood N20 – 3
5. Tarragon K20 – 3
6. El Dorado Tan 201
7. Falcon AA18
8. Evan's Gray (discontinued)
9. Nutmeg E39 – 3
10. Woodgate G20 – 3 (discontinued)
11. Cobblestone AA16
12. Sepia AA17
13. Saddlebrown 200
14. Nomad R20 – 3 (discontinued)
15. Chadbury P20 – 3
16. Loam 413
18. Olive Grove KM3976 – 5
20. Fortune Leaves 3920 – 5
21. Hampstead 3919 – 3
22. Crème de Caramel 3943 – 3
23. Rockvale 3959 – 3
24. Mocha Mousse 3944 – 5
25. Cameroon Bay 4199 – 3
26. Stone Wall 3952 – 5
27. Carlton Clay 3951 – 3
28. Cranberry Craze 4200 – 5
29. Rare Earth AC249 – 5
30. Villita 196
31. Cargo 412

**Benjamin Moore**

51. Travertine Tan (Alexandria Beige) HC – 77
52. Rockies Brown 2107 – 30
53. Taos Taupe 2111 – 40
54. Briarwood 73
55. Saddle Soap 2110 – 30
56. Dakota Loam (Hasbrouck Brown) HC – 71

**Cabot Solid Color Siding Products**

70. Driftwood Gray
71. Pewter Gray
72. Beechwood Gray
73. Dark Gray
74. Taupe
77. Red Cedar (discontinued)
78. New Cedar (discontinued)
79. Sandstone
80. Chestnut Brown
82. New Redwood (discontinued)

83. Oak Brown
84. Sagebrush
85. Thatch
86. Acorn

87. Canyon
89. Bark Mulch

32. Wood Moss 197
33. Castle Dale KM3935 – 3

## *Exhibit 3.2.3—Approved Exterior Colors (Continued)*

### FASCIA ONLY COLORS

**Kelly Moore**

17. Wrightsford KM4176 – 5
19. Vermeer's Fields AC251 – 5
34. Rocky Mountain AC252 – 5
45. Dark Glasses AC256 – 5

**Benjamin Moore**

50. Pine Cone Brown 2113 – 20
65. Tudor Brown 62
96. Temptation 1609
97. French Beret 1610

**Cabot Solid Color Siding Products**

75. Spanish Moss
76. Mission Brown
81. Slate Gray (discontinued)
88. Burnt Hickory
95. Bark

# *Exhibit 3.2.3—Approved Exterior Colors (Continued)*

## FRONT DOOR COLORS

**House siding colors and fascia only colors may also be applied to front doors.**

**Kelly Moore**

1. Pigeon Wing N38 – 2
2. Glen Cove N40 – 3
3. Blue Note V19 – 3
4. Glen Deep V20 – 3
5. Woodland Night AA57
6. Shadow Pool AA56
7. Nightwatch W40 – 3
8. Teton Blue 203
9. Stormy Blue W15 – 3
10. Goblin Blue V40 – 3
11. Magic Waters W20 – 3
12. Delta Blue 211
13. Blue Shadow U34 – 3
14. Riviera 156
15. Deep Pool T35 – 3
16. Tecumseh T15 – 3
17. Royalist Green T20 – 3
18. Dusty Laurel R39 – 3
19. Dianthus Green S20 – 3
20. Watermelon Green R35 – 3
21. Ping Pong P15 – 3
22. Moss N35 – 3
23. Parody M20 – 3
24. Mallard Green 150
25. Smyrna Y40 – 3
26. Red Plum AA49
27. Alcazar AA5
28. Dark Garnet AA6
29. Sequoia Redwood 159
30. Green Thumb KM 149
31. Majestic Ridge KM 4096 – 5

**Benjamin Moore**

32. Storm Cloud Grey 2140 – 40
33. Dusky Mirage (Caribbean Teal) 2123 – 20

**Cabot Solid Color**

34. Arboretum
35. Allagash
36. Mountain Laurel
37. Evergreen

# *Exhibit 3.2.3—Approved Exterior Colors (Continued)*

## DECK STAINS

**Note:** You may choose to use a different brand than those listed for deck stains. However, the color must match one of the colors identified in this exhibit that represents the "approved Ranch color palette". You will be required to identify the matching color on the Fast Track Exterior Deck Staining application form.

**BEHR Semi-Transparent Stains**

1. Woodbridge DP – 530
2. Cappuccino DP – 529
3. Chestnut DP – 310
4. Sable DP – 318
5. Chocolate DP – 397
6. Terra Cotta DP – 396
7. Russet DP – 354
8. Wrangler Brown DP – 389
9. Bayberry DP – 381
10. Dark Gray DP – 503
11. Chatham Fog DP – 540
12. Boot Hill Gray DP – 386
13. Gray Seas DP – 300
14. Pewter DP – 518
15. Drift Gray DP – 317
16. Castle Gray DP – 509
17. Tugboat DP – 535
18. Woodchip DP – 532
19. Padre Brown DP – 335
20. Oxford Brown DP – 359
21. Coffee DP – 358
22. Cordovan Brown DP – 319
23. Slate DP – 376

**CABOT Decking Stains**

24. Shale
25. Slate Gray
26. Foothill
27. Pewter Gray
28. Beechwood Gray
29. Dark Gray
30. Pepperwood
31. Sandstone
32. Chestnut Brown
33. Bark Mulch
34. Oak Brown
35. Bark
36. Spanish Moss
37. Cordovan Brown
38. Burnt Hickory

# *Exhibit 3.2.3—Approved Exterior Colors (Continued)*

## ROOFING SHINGLE INDEX

This list of approvable colors for roofing has been approved by the Town of Portola Valley (**"approved Ranch color palette"**). Because of continual changes by manufacturers, the Town has agreed that residents may propose to use a color not on this approved list as long as the color is within this approved Ranch color palette.

**Elk Roofing**

1. Barkwood
2. Hickory
3. Weatheredwood
4. Antique Slate
5. Sablewood

**ēco Shake**

1. Umber
2. Charcoal

**CertainTeed (formerly Celotex)**
(100 sq. ft. = # lbs.)

**Presidential TL Ultimate**
(wood shake cut, triple layer, 465 lbs.)

1. Aged Bark
2. Autumn Blend
3. Charcoal Black
4. Country Gray
5. Platinum
6. Shadow Gray

**Landmark TL Ultimate Luxury**
(triple layer, 365 lbs.)

1. Aged Bark
2. Chestnut
3. Moire Black
4. Mountain Timber
5. Old Overton
6. Platinum
7. Shenandoah
8. Country Gray

**Landmark & Landmark Plus**
(260-300 lbs.)

1. Burnt Sienna
2. Georgetown Gray
3. Heather Blend
4. Moire Black
5. Resawn Shake
6. Thunderstorm Gray
7. Weathered Wood

**Presidential Shakes: Luxury**
(wood shake cut, 400 lbs.)

1. Aged Bark
2. Autumn Blend
3. Charcoal Black
4. Chestnut
5. Country Gray
6. Platinum
7. Shadow Gray

**Landmark Premium**
(330 lbs.)

1. Aged Bark
2. Chestnut
3. Country Gray
4. Graphite
5. Hearthstone
6. Mountain Timber
7. Platinum

# *Exhibit 3.2.3—Approved Exterior Colors (Continued)*

## TREATING WOOD SHINGLES

As noted in the Guidelines, shingled or clapboard homes may be sealed with a clear sealer or with a semi-solid stain or solid-body stain.

A 2’ X 2’ sample should be applied; the sample will be the deciding factor for approval.

There are many brands. Most contain some color. Here are several products that have been used at the Ranch:

**Behr**
**Cabot**
**Olympic**
**Preserva Wood**
**Total Wood Protectant (TWP)**

# 3.3—House Additions and Increasing Footprints

## 3.3.1 Concept Statement

Any proposed addition to an existing structure shall acknowledge existing site conditions, house style, type, privacy, and blend into the natural environment. The size, shape, proportions, massing, and other distinguishing elements of any proposed addition shall blend with the existing structure so the new addition becomes an integral part of the original home.

## 3.3.2 Building Envelope Lines and Non-living Lines

### *3.3.2.1 Building Envelopes*

Each house on the Ranch has been built within Building Envelope lines. The homeowner should consult the original site plan, landscape plan, or Building Envelope plans on file at the Town Hall to verify the location of appropriate Building Envelope lines. In some cases, verification by a licensed land surveyor will be required. The non-living line is a special element of a Building Envelope and is located approximately parallel to the front property line adjacent to the street. This term "non-living line," appears in numerous drawings and maps related to the Ranch as well as some of the original plot maps, and has the same meaning as the term "Living Area setback line" used in the PUD Statements. Unless otherwise required by law, such as in relation to an application for an ADU, this non-living line has previously been determined through the Town PUD process and serves as the front setback. With certain exceptions, encroachment over these Building Envelope lines is not possible, and all living space is to be contained behind the non-living line within the Building Envelope. .

### *3.3.2.2 Restricted Application of Town Averaging Provision*

The amount of space between houses impacts neighbors' privacy as well as the overall ambience of Portola Valley Ranch. Although there are a few exceptions, nearly all houses in Portola Valley Ranch were originally sited to maintain at least 32 feet between building envelopes of adjacent parcels.

The Town of Portola Valley's Zoning Ordinance has an averaging provision that under limited circumstances allows a homeowner to build beyond their parcel's building envelope and/or non-living line. (See Exhibits 3.3.2.2 A and 3.3.2.2 B.) Portola Valley Ranch Design Guidelines are more restrictive than the Town's averaging provision.

Portola Valley Ranch does not allow a homeowner to pre-empt the possibility of a neighbor's use of the averaging provision on a future project simply by being the first to request averaging on an application to the Design Committee.

For the reasons stated above, Portola Valley Ranch has elected to restrict application of the Town's averaging provision such that, unless otherwise required by law, no averaging that would result in less than 32 feet between houses will be approved.

Averaging will not be approved if it would preclude a neighbor from using the averaging provision in a future application. For further details, see Exhibit 3.3.2.2 C.

Nothing in the foregoing is intended to preclude the application or alter the effect of other provisions of the Design Guidelines. All other applicable sections of the Design Guidelines must also be considered when reviewing an application for footprint expansion.

#### *3.3.2.3 Exceptions*

The Town averaging provision does not allow building structures to encroach across property lines or E-2 lines. Subject to Design Committee and ASCC approval, decks may extend into the side or rear yards up to ten feet, but shall, in no case, extend for a distance greater than one third of such yard. (See Section 3.5.3.5.)

#### *3.3.2.4 General Impact of Site Design*

The physical site parameters will be established by a site analysis of building set back lines. Numerous other factors listed below will further influence final site design and building layout of a Project.

#### *3.3.2.5 E-2 Incursions*

Encroachment into E-2 Areas is strictly prohibited except for some limited landscape planting. An exception to this rule allows entry path lighting to be placed in the front E-2 area according to Design Guideline Section 3.9.

#### *3.3.2.6 Adjustment to Building Envelope and Non-living Lines*

Adjustments can be made to both Building Envelope lines and non-living lines to accommodate building and deck additions to a home. This is a very complicated and time-consuming process. It will require approval by the following agencies and review committees in the following order:

1. Design Committee
2. Portola Valley Ranch Board of Directors
3. Town ASCC
4. Town Planning Commission*
5. Town Council*

*only upon appeal of ASCC decision

Relocation or adjustment of Building Envelope lines and/or non-living lines are not likely to be considered when those line adjustments are made between homes in close proximity. Line adjustments are more likely to be approved when those lines are at the end of cul-de-sacs or when there are no homes directly across the street from the proposed Project. In general, proximity and minimum distance between adjacent homes will be considered an important factor in approval of Building Envelope line or non-living line adjustments.

### 3.3.3 Conformance to Existing Structure

All exterior improvements to an existing residence should be compatible in style, massing, roof lines, materials, etc. with the existing structure. If a complete redesign of the existing structure and proposed additions is planned, the design elements should be compatible with those found throughout the Ranch.

### 3.3.4 Conformance to Neighborhood

#### *3.3.4.1 Neighborhood Integrity*

Proposed additions to the existing residence must not only conform to the existing structure, but must also integrate with the surrounding neighborhood. Since the original design of the Ranch offers a variety of structural and architectural elements, neighboring structures may influence some of the exterior features of the proposed addition so as to provide variety among nearby houses.

#### *3.3.4.2 Preservation of Views*

Any proposed addition should be planned in a way that will not impair or reduce the existing views enjoyed by neighbors. These views include close and distant views to the bay, mountains, surrounding forest areas and

oak grasslands. The definition of "neighbors" includes those directly adjacent to the house as well as those houses above and below.

#### *3.3.4.3 Height Considerations*

The height of homes on the Ranch cannot exceed 36 feet where that vertical distance is measured from the average level of the highest and lowest points of the finished ground surface adjoining the wall of the building to the highest point of the building or its appurtenances. This does not, however, mean that a homeowner has the right to build to the maximum height limitation. There are a number of factors that will influence the appropriate maximum allowed on a site. They include the following:

- Distance to neighbors
- View Corridors of neighbors
- Site topography of lot (See Section 3.3.5)
- Bulk and mass considerations
- Design details
- Exterior materials
- Colors used
- Privacy to adjacent neighbors

#### *3.3.4.4 Proximity to Street and Other Structures*

The proximity of the addition to the street and other structures will influence its allowable size and massing. Typically, as a structure encroaches on either of these elements, massing should be reduced. Therefore, in many cases, a one-story structure is more appropriate than a multi-story structure.

#### *3.3.4.5 Bulk & Mass Considerations*

The overall intent of the guidelines is to create design solutions that will minimize bulk and mass of the individual structures. Bulk and mass are greatly influenced by building location, site topography, adjacent buildings and adjacent landscaping. In the case of a remodel or an addition to an existing structure, the existing structural forms will further influence the massing and bulk of any proposed addition. Large vertical elements with large vertical walls that are not interrupted by windows, decks, lower building heights, or landscaping are not acceptable. The addition of large decks may also not be acceptable, especially if a solid or semi-solid railing is proposed. Consistent with Town ordinances, buildings should be designed to step down a hill and not perch on top of it.

#### *3.3.4.6 Privacy of Adjacent Neighbors*

Any proposed addition must respect the need for privacy between neighbors. Elements to consider include location of proposed windows, outside decks, doors, and air conditioning/heat pump units (because of noise). During the preliminary site design, consideration should be given to the existing location of similar features of neighbors, *i.e.,* windows, decks, etc.

### 3.3.5 Second Story Additions

#### *3.3.5.1 General Considerations*

In some cases, second story additions may be approved based upon site considerations. In other cases, second story additions may not be allowed. The appropriateness of a second story addition will be greatly influenced

by the specific location. Each site topography type will either limit or accommodate a second story addition. In addition to the site considerations listed below, the appropriateness of a second story addition will also be influenced by items previously listed above in Section 3.3.4.

#### *3.3.5.2 Flat Lot*

Because there are few flat lot areas in the Ranch, single story solutions may be the most appropriate option as uphill lots may be directly adjacent to them. Careful site review will establish whether view corridors and/or privacy are compromised by a second story addition.

#### *3.3.5.3 Uphill Lot*

Uphill lots usually offer the most opportunity for a second story solution. This is based upon the assumption that the uphill area of the site will offer an opportunity to hide the massing of the second story solution. In effect, the house is stepped up the hill consistent with the contours of the land.

#### *3.3.5.4 Downhill Lot*

Downhill lots usually do not afford the opportunity to add a second story above the entry level of the home. Both the Ranch PUD Statements and the Town ordinances suggest stepping the homes down the hill as an important element of the Ranch design concept. This is specifically done to reduce massing of the structure when viewed from below. Therefore, any proposed addition should be considered at a lower level.

#### *3.3.5.5 Ridge Line Lot*

Ridge line lots where the home can be viewed from a distance on the ridge line are not permitted by the PUD Statements or Town ordinances. Therefore, second story additions on ridge line lots are not permitted. The recommended alternative for an addition would be to step the proposed addition down the hill or underneath the existing structure.

### 3.3.6 Existing Carports and Carport Enclosures

Existing carports & existing carport enclosures will also influence location and sizes of proposed additions. (See Section 3.8.) The impact of these additions will be judged by the cumulative effect of the garage and/or carport and the addition.

### 3.3.7 Accessory Dwelling Unit (ADU) and Junior Accessory Dwelling Unit (JADU)

#### *3.3.7.1 Background*

The State of California has enacted legislation to encourage the construction of ADUs and JADUs to provide more housing. A JADU must be contained entirely within the primary single-family residence (which includes converting an attached garage). An ADU can be contained within the primary residence, can be new construction attached to a primary residence or a mix of new construction and converted space, can be detached new construction, or can be a conversion of an existing accessory structure (such as a garage or carport).

For an ADU/JADU application, the Town of Portola Valley does not require an applicant to receive PVR Design review approval prior to submitting for a building permit to the Town. However, PVR Design Committee review is still required by the Association.

ADU proposals that comply with the parcel building envelope and non-living line are strongly encouraged to retain the overall Ranch design concepts as much as possible. However, an ADU that does not comply with the building envelope and/or the non-living line may be proposed; in such cases, the applicant should be aware of

potential collateral issues including fire safety, emergency vehicle access, ingress/egress access, and other public safety considerations.

The review requirements for ADUs and JADUs can differ from a standard remodel application, and different requirements and procedures may apply depending on the particulars of the ADU/JADU application. For this reason, an application for an ADU or JADU must be for only those elements associated with constructing (or converting to) an ADU or JADU and cannot be combined with any other improvements. The applicant may submit a companion application at the same time for other improvements that are to be made contemporaneously with the ADU or JADU. Architectural drawings and other plans may be common between the ADU/JADU application and companion application. Application fees will be calculated as though the ADU/JADU and companion application (if submitted in parallel) were part of one application.

The PVR community supports the legislative intent of increasing affordable housing in California, but also recognizes that applications for ADUs or JADUs on the Ranch have the potential to impose unintended consequences on the applicant's surrounding neighbors. As a result, applicants are strongly encouraged to share their proposed plans with their neighbors before submitting an application to the Design Committee or the Town, and to work cooperatively with their neighbors to minimize any concerns that their proposal may raise. Applicants are strongly encouraged to propose designs that preserve existing privacy between homes, consider the impact of any additional lighting on neighbors, and consider fire safe landscape screening where possible. (See Section 1.3 and Section 3.3.4.6 for privacy considerations)

Unless otherwise mandated by State or Town laws or ordinances, ADUs and JADUs are subject to the same requirements as outlined in these Design Guidelines.

### *3.3.7.2 PVR Application Submission Requirements*

The applicant must submit the following to the PVR Design Committee:

1. A completed Standard Application Form with all the required supporting documentation and fee as described in Section 2.2.1. The application must be for only elements associated with constructing or converting an ADU or JADU; it cannot be combined with any other improvements.
2. A completed Town of Portola Valley Accessory Dwelling Fire Safety Checklist (See Portola Valley Town website) if the proposed ADU does not comply with the parcel building envelope and/or non-living line whether through new construction or conversion of an existing structure. If the proposed ADU does comply with the building envelope and non-living line, this fire safety checklist is optional, but recommended.
3. A proposed parking plan for the parcel once construction/conversion is completed.
4. If the application is for conversion of a garage or carport to an ADU or JADU and the applicant wishes to build new covered parking, a separate application for the new covered parking must be submitted and will be considered through the standard application review process. Replacement of covered parking is not required.
5. The applicant may submit a companion application at the same time for other improvements that are to be made contemporaneously with the ADU or JADU. Architectural drawings and other plans may be common between the ADU/JADU application and companion application. Application fees will be calculated as though the ADU/JADU and companion application (if submitted in parallel) were part of one application.

See Section 2.3.2 for details on the Design Committee review process.

# *Exhibit 3.3.2.2A—Applying Town Averaging Provision*

TOWN of PORTOLA VALLEY

Town Hall and Offices 765 Portola Road, Portola Valley, CA 94028 Tel. (415) 851-1700 Fax: (415) 851-4677

March 4, 1991

MEMORANDUM

To : Ellen Schillig, Planning Coordinator

From : Tom Vlasic, Deputy Town Planner

Subject : **Applying the Zoning Ordinance "Averaging Provisions" To a Typical Addition Project at Portola Valley Ranch**

To facilitate use of the Portola Valley Ranch Building Envelope Maps, transmitted under separate cover, we have prepared the following example explanation of how the zoning ordinance averaging provisions apply to *building envelope* and *non-living lines* at Portola Valley Ranch.

Sections 18.52.040 and 18.52.050 of the Portola Valley zoning ordinance allow for *setback averaging*. Section II. Q.1.a) 3) of the Portola Valley Ranch PUD Statement incorporates these averaging provisions by reference, and, therefore, the provisions apply to Portola Valley Ranch. The attached example shows how the provisions would apply to a typical house-front addition and *non-living line* on an hypothetical parcel at the Ranch. The following points should be noted and procedures followed:

1. *The zoning ordinance averaging provisions state that the house must "average" the required setback, and in no case may the structure be closer to the front property line than 80% of the required setback.* In this example, the required front yard setback is set by the non-living line. The line is not a constant distance from the front property line, so the average setback of the non-living line must be established. The distance between the front property line and points 1, 2, 3, and 4 is measured and the average calculated. (The number of points used will depend on the complexity of the individual project.) In the example, the points measure 44', 36', 32' and 35', and the average required setback is 36.8 feet. Further, 80% (i.e., the minimum permitted setback) would be 80% of 36.8 or 29.4 feet.

2. *The average setback of the house with the proposed addition* is established by measuring the setback from the front property line at points a, b, c, and d, and calculating the average. In this case the points measure 35', 31', 41', and 44 ', and the average setback is 37.8 feet. This is one (1) foot more setback than is required. Further, the proposed addition maintains a minimum setback of 31 feet and, therefore, does not violate the 80% required minimum of 29.4 feet.

Thus, in this example, the addition crosses the non-living line, but is in compliance with the averaging provisions of the zoning ordinance.

This same approach would be taken to determine compliance with averaging provisions for a project that is proposed to cross a *building envelope line*.

TCV

CC. ASCC
Portola Valley Associates
Portola Valley Ranch HOA ✓
Portola Valley Ranch Design Committee
Bill Maston

# *Exhibit 3.3.2.2B—Town Averaging Provision—Building Envelope*

TOWN of PORTOLA VALLEY

Town Hall and Offices 765 Portola Road, Portola Valley, CA 94028 Tel (415) 851-1700 Fax (415) 851-4677

July 30, 1991

Portola Valley Ranch Association
Board of Directors
1 Indian Crossing
Portola Valley, California 94028

Subject : **Portola Valley Ranch Building Envelope Record Maps**
**Map Clarification and Interpretation**

Dear Members of the Board:

Earlier this year we transmitted to you by letter dated March 7, 1991 two copies of the ***December 12, 1990, 13 sheet plan set @ 1"= 60 feet*** showing the final certified building envelopes for virtually all lots within Portola Valley Ranch. A month or so later, on your behalf, Margaret A. Sloan, Jackson, Tufts, Cole & Black, contacted us to ask for clarification of certain matters associated with the maps. In particular, she explained that she was seeking clarification of the Town's position relative to conflicts between existing houses and the certified building envelope lines. In follow-up to her request, we have reviewed several applications for improvements on parcels at the Ranch and have attempted to determine the extent to which conflicts might exist. We have also reviewed this matter with Deputy Town Attorney Sherrod Davis. Our findings, conclusions and directions are set forth below.

**Statement of Concern Raised by Ms. Sloan**

As stated in our March 7, 1991 letter, the December 12, 1990 building envelope plans contain the record building envelope and non-living setback lines for parcels at Portola Valley Ranch. Anyone applying for a house addition must conform with the established lines. Ms. Sloan specifically asked whether or not an existing approved structure (i.e., house, carport or garage) that was found to not conform with these lines would be considered "non-conforming", and, therefore, in violation of the Town zoning ordinance and the Portola Valley Ranch Planned Unit Development (PUD).

**Response and Direction for Map Interpretation**

We conclude that where an existing house does not conform with the building envelope, the *house line* shall be considered the building envelope line. In such instances the existing house wall, and roof overhang shall be considered as being in conformity with the zoning and PUD setback requirements. However, any new construction shall be in conformity with the building envelope lines as shown on the approved building envelope maps.

The attached example shows how the above interpretation would apply to a hypothetical parcel at the Ranch. The example shows that a portion of the house was constructed across the side building envelop line. Now, the house line becomes the established envelope boundary for the existing house. However, any addition would have to

# *Exhibit 3.3.2.2B—Town Averaging Provision—Building Envelope (Continued)*



conform to the building envelope as established on the December 12, 1990 map. This includes ground level as well as upper story additions. For example, if someone wanted to add a second story addition over the existing house, the second story would have to meet the building envelope map limits, not the limits set by the line of the existing house.

It should be noted, however, that in some cases where very minor encroachments exist, and the nature of the building envelope and site improvements are precisely documented, it may be appropriate to conclude that the house wall line and extensions of this line constitute the actual building envelope lines for the site. In these instances, additions (including second story additions) may be found in conformity with the building envelope line that results from a reasonable interpretation of the specific conditions, and subject to the normal Ranch Design Committee and Town ASCC reviews and approvals. In such instances, consultations with the Town Planners office will be needed.

**Reasoning in Support of Interpretation**

In any case, the above interpretation is intended to specifically recognize that existing houses, constructed with full Town ASCC review and approval, are in conformity with the zoning ordinance and PUD provisions, even though there appears to be a conflict with the building envelope maps. These houses were constructed according to plans approved by the Town and have been in existence, in most cases, for many years. The neighbors are aware of the locations of these houses and have had ample time to make plans and decisions with full recognition of the house locations. Further, no building envelope line adjustments on the property in question, or the neighboring properties are needed to find that the houses conform with zoning and setback limits. *Therefore, the limitations for individual site use remain in effect as established with the original building envelope lines established with the PUD as shown on the December 12, 1990 record maps.*

**Recent Application Experiences**

Since this issue was raised by Ms. Sloan, we have reviewed between five and ten recent requests for residential additions at Portola Valley Ranch. Only one project was found to have a problem. The project was a small residential addition for Mr. Stanley Weithorn at 6 Fremontia. In this case an engineering survey was completed by the applicant and the existing house was found to slightly extend beyond the record building envelope line. Using the above guidelines, the house was found to be in conformity with the building envelope requirements, and the additions were also interpreted to conform with the building envelope lines. The project was approved, including both Design Committee and ASCC reviews and approvals, and is now under construction.

**Conclusion**

Given the unique nature of the Portola Valley Ranch development, and the manner in which the houses were originally sited (i.e., to maximize privacy, preserve open views from interior spaces, minimize grading and vegetation removal) some flexibility must be exercised in dealing with the conditions identified by Ms. Sloan. At the same time, the

# *Exhibit 3.3.2.2B—Town Averaging Provision—Building Envelope (Continued)*

Portola Valley Ranch Association, July 30, 1991 Page 3

record building envelope maps are requirements of the PUD, and are essential to guide future uses of parcels at the Ranch. We will continue to rely on these maps as stated in the March 7, 1991 letter to you, but will have to exercise reasonable judgement in those cases where strict interpretation of the lines does not achieve the actual intent of the maps.

We hope that the above comments and interpretations eliminate the concerns expressed by Ms. Sloan. Should you have any further concerns or need clarification of any of the above comments, please let me know.

Very truly yours,

Thomas C. Vlasic, AICP
Deputy Town Planner

CC Margaret Sloan, Jackson, Tufts, Cole & Black
Ellen Schillig
Portola Valley Associates
Bill Maston
ASCC Chairman
Town Attorney

# *Exhibit 3.3.2.2B—Town Averaging Provision—Building Envelope (Continued)*

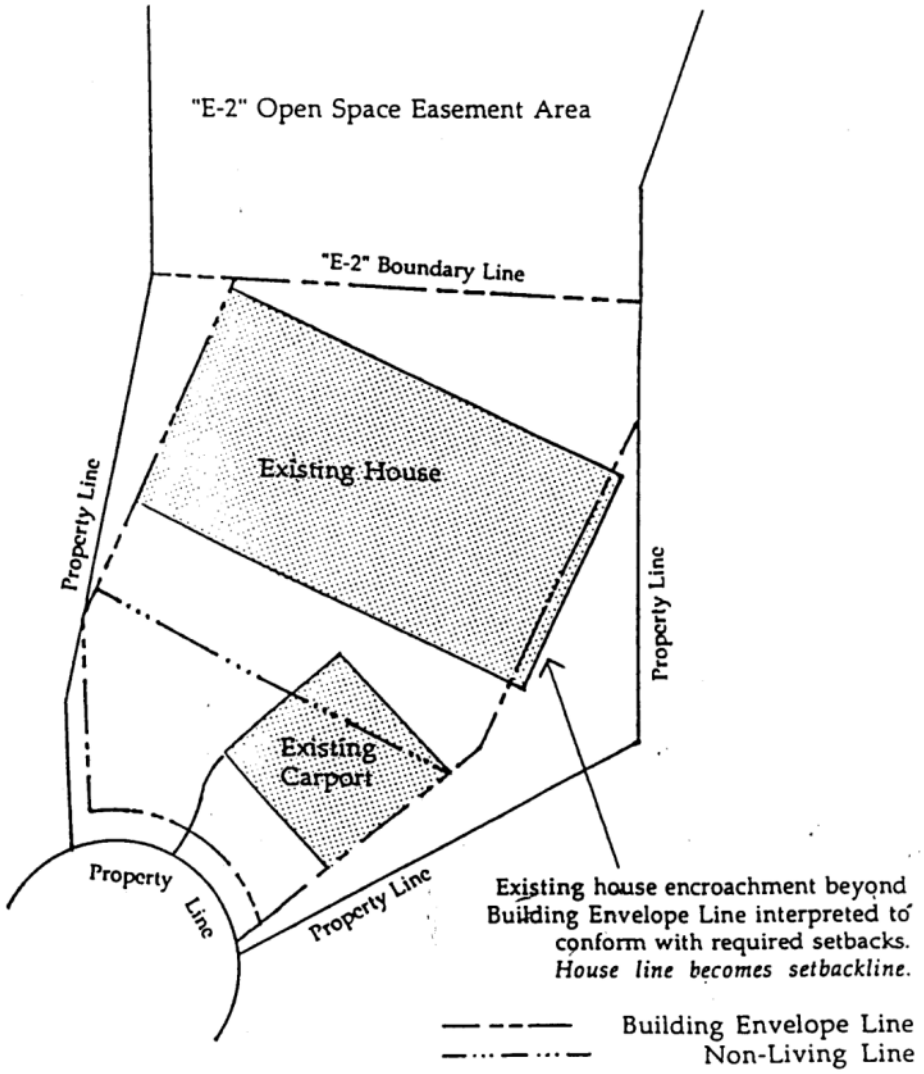


Interpretation of Building Envelope Maps
Portola Valley Ranch

TCV 7/30/91

Scale: 1" = 20 feet

# *Exhibit 3.3.2.2C—Implementation of 32 Ft. Rule*

**Implementation of 32 Foot Rule**

"Averaging" allows a homeowner, under certain conditions, to expand into the available yard, *i.e.* the space between the building envelope (BE) and the property line, by a maximum of 20 % of the yard. In order to ensure that a) a minimum distance of 32 foot between adjacent houses is maintained and b) equal rights for potential expansion are accorded to affected neighbors, the averaging restrictions in the Design Guidelines in Section 3.3.2.2 should be implemented as follows:

After the designing architect has arrived at an initial draft, he or she will check it against the 32-foot rule by selecting a number of points P along the proposed house line where this line encroaches past the building envelope (BE). The number of these points depends on the complexity of the geometry and is left to the designer.

At each point P a line p is drawn at a right angle to the property line. The distances from the property line to the BEs, as measured along p, are denoted as d1 (applicant) and d2 (neighbor). (All units are in feet).

There are three cases:

1. If the distance between the BEs (which is (d1+d2)) is equal or less than 32 feet, no averaging is allowed by either party and the design must be modified.
2. If the distance between the BEs is greater than or equal to 40 feet, both parties may use averaging to the maximum allowed at this point, as the distance between the houses will be at least 32 feet.
3. If (d1+d2) is between 32 and 40 feet, the total available distance for averaging for both neighbors is d1+d2- 32 feet, a number between 0 and 8 feet. This distance is apportioned to each of the homeowners in the ratio of the available distance between each neighbor's BE and the property line, *i.e.*, d1 and d2. The allowable space to be used by each neighbor for averaging will be restricted using the following formula.

   For neighbor 1, the formula will be d1/(d1+d2) times (d1+d2-32) feet

   For neighbor 2, the formula will be d2/(d1+d2) times (d1+d2-32) feet

   The sum of both numbers derived from these formulae will equal the total distance available for averaging while maintaining the required minimum distance of 32 feet between houses. Therefore neighbor 1 can proceed within the above limitation while leaving a proportional distance for use by neighbor 2.

The designer will then go through one or more iterations to shape the desired footprint and make it compatible with the overall design goals while meeting the 32-foot rule requirements.

If a homeowner is anticipating doing a remodel that makes use of the averaging provision, it is highly recommended that prior to finalizing any preliminary designs with the architect or designer that a meeting be held with the Design Committee Architectural Consultant and Town Planner to verify and ensure that Section 3.3.2.2 is being appropriately interpreted and applied. This will ensure that plans have been agreed to by both the Design Committee and the Town of Portola Valley prior to finalizing designs and completion of necessary drawings for the design review process. It is also highly recommended that the building envelope lines and property lines, including calculations, be prepared by a licensed surveyor or civil engineer and that these be established on a certified site plan prepared by the same as part of the initial Design Application submittal package.

# 3.4—Exterior Wall and Roof Treatments

See Section 3.2 for allowable colors and finishes for all structural elements discussed in this Section.

Please note that the Design Guidelines, including Exhibits, describe requirements and designs that may be superseded by updated Town, State, and Fire District building codes. As a result, residents and their contractors are responsible for ensuring compliance with all current building codes and requirements.

## 3.4.1 Concept Statement

Exterior walls and roofs are the main structural elements that provide the blending of the Ranch homes into the natural surroundings and as such the choice of materials and colors is key to ensure visual blending. All external architectural/structural elements and details should generally be angular or rectilinear (*i.e.*, not curved or rounded) in keeping with the overall Ranch architectural designs.

## 3.4.2 General Design Concepts

### *3.4.2.1 Exterior Walls*

Most homes on the Ranch were originally built with wood exteriors to best harmonize with the natural surroundings. However, because the Ranch is in the Wildland Urban Interface (WUI) area, California and Town codes now require certain minimum standards to provide a reasonable level of exterior wildfire exposure protection. As such, the use of non-combustible materials and designs to resist flame intrusion or burning embers improves fire safety for homes on the Ranch. (See Exhibit 3.4.1 for Typical Building Components.)

Siding materials currently used at the Ranch include board and batten, T111 plywood, clapboard, wood shingles, stucco, and fiber cement. However, because wood shingles pose an especially high fire risk due to the numerous crevices that can trap embers, wood shingles are no longer allowed except for repairs on existing homes. Homeowners should be aware that the magnitude of any proposed repairs may trigger the Town's requirement for the use of non-combustible materials. Non-combustible materials include stucco, concrete or fiber cement products that simulate wood or other texture that can be painted or are pre-finished in colors that will match the approved Ranch color palette (See Exhibit 3.2.3). The same materials used on the house must be used on the carport/garage. With respect to board and batten, larger battens, *e.g.*, 1x3 instead of 1x2 are encouraged to provide visual interest and shadowing. Large expanses of stucco may be mitigated with fiber cement shingles or stone elements. The Design Committee must approve the texture of stucco and a sample provided. As new siding materials become available, they may be evaluated as to whether they would give the natural appearance required. As such materials are approved, they may be added to the Design Guidelines together with guidelines on acceptable designs and colors.

### *3.4.2.2 Roofs and Fascia*

The Town requires the use of "Class A" (fire safety rating) roof coverings (note that roof material and roof assembly are separate and contribute to the determination of a Class A roof covering). A Fast Track Application can be used for shingles, torch down, tar and gravel, TPO/PVC, and foam if using approvable colors for flat and sloping roofs that are listed in Section 3.2.3. Metal or any other roofing material or any color not included in the approved color palette noted in Section 3.2.3 and Exhibit 3.2.3 requires a Standard Application and will be reviewed for approvability in the context of the overall Ranch aesthetic. Samples of roof materials that are within the approved color palette are available for viewing at the Ranch Office. On an individual lot, all flat roofs should be finished with the same material and color and all sloped roofs finished with the same material and color. The flashing that protects the upper edge of the fascia should be the same color as the

fascia. See Exhibit 3.4.2.2 for examples of typical flat and sloped roof fascia and their flashings, and Section 3.2.3 for approvable materials, reflectivity, and color.

### *3.4.2.3 Exterior Doors*

House entrance doors may be metal, wood or glass. Person entry doors other than front entry doors must be metal or wood and match the siding or be flat slab doors. Access doors to decks and patios either may be typical sliding glass doors in frames composed of metal, clad wood, or a composite that resembles metal or wood, or may be swinging glass or wood doors. Access doors to under-floor storage areas may be blind doors but, in any case, should be made from the same material as the siding in which they are located so that they are less visible. A "blind door," *i.e.*, a door that has hidden hinges, no trim and is made from the same material and stained the same color as the surface in which it is installed, may be used anywhere on any Ranch structure. For glass doors, homeowners are strongly encouraged to install multi-pane (instead of single pane) and tempered glass for improved fire safety. It is important to note that “clear” glass includes some light tint for reflectivity and heat protection; when doing a partial glass door or glazing replacement, similar color tones must be used for compatibility.

### *3.4.2.4 Garage Doors*

Overhead garage doors may be metal, wood, glass or other materials as they become available provided that the appearance and color blends well with the rest of the structure. Consideration should be given to using metal or other fire-resistant materials to improve fire safety. Clear glass may be used to preserve View Corridors. Two single doors as opposed to a double door may be considered to reduce massing. Other structural elements such as trellises may be considered to provide additional visual interest.

As newer designs become available, homeowners may choose to propose alternative designs for Design Committee review and approval. The Design Committee will consider such alternative designs based on site location and how well the proposal integrates with the overall Ranch aesthetic. Because frosted glass is reflective and generally not compatible with the Ranch aesthetic, consideration should be given to whether extensive use of such material is appropriate in a given location (e.g., close to or directly facing street, subject to direct sunlight, etc). Further, it is recommended to consider limiting such glass panels to only the upper 50% of the garage door.

(See Section 3.8 for a complete discussion of garage design.)

### *3.4.2.5 Windows*

Windows may be the typical fixed glass or they may be sliding, casement, single or double hung, or transom style. Frames may be anodized metal, clad wood, or a composite that resembles metal or wood. Clear glass is acceptable and the glass should generally be in larger pane sizes, not cut up into small panes that give a "colonial" feeling. Other types of glass such as opaque glass will be considered on a case-by-case basis depending on size and location. Reflective glass and some colors are not acceptable. (See Section 3.2.3) Homeowners are strongly encouraged to install multi-pane (instead of single pane) and tempered glass for improved fire safety. It is important to note that “clear” glass includes some light tint for reflectivity and heat protection; when doing a partial window replacement, similar color tones must be used for compatibility.

### *3.4.2.6 Exterior Window and Door Shades*

Dark "see through" solar screen material (PVC-coated fiberglass) is encouraged for external window and door shading, however other materials may be used. Materials that are not fire-resistant are discouraged as they can catch fire and encourage glass breakage. All such shades must be maintained in a well-repaired and attractive manner. Samples of the preferred materials are available at the Ranch Office. External roll-up metal shades may also be used to provide sun protection over doors and windows. The acceptability of these

materials will be determined, in part, on whether the color blends with the exterior color of the structure and whether the material is not reflective.

Shades that are retractable over trellises may also be installed. If drop down valances around the perimeter of a deck are proposed, the acceptability of any such valance and the length of the drop down will be determined based on any potential impact on view corridors, significant views, and massing. Please note that deck lighting is limited to what is described in Section 3.9.

See Exhibit 3.4.2.6 for examples of window shades and over trellis shades.

#### *3.4.2.7 Skylights*

Pyramidal or flat skylights are acceptable configurations. The Town requires that any new skylights (replacement or additional) meet the standards for windows and thus are required to be tempered glass. All skylights on a structure should be the same shape; the only allowed exception is if only some of the skylights are being replaced or added in which case a mixture of pre-existing pyramidal or domed skylights can be combined with flat glass. No new or replacement acrylic domes are allowed. If installing flat skylights, depending on the location and visibility of the installation, the Design Committee may require a limitation on the pitch to minimize the maximum height (generally no more than 18” above the roof surface). The Design Committee may also require a limitation on the size of glass pyramidal skylights. Skylight covers (fire resistant solar screen material) mounted on frames should be as close in size to the skylight as possible to be unobtrusive.

#### *3.4.2.8 Sun Rooms*

Sun rooms created with transparent material should be made from clear or bronze, non-reflective glass. Multi-pane v. single pane and tempered glass is strongly encouraged to improve fire safety. Dark anodized metal exterior frames are encouraged. The walls must be essentially vertical and the roof should be slanted or flat. Rounded sections connecting the wall and roof are not acceptable.

### 3.4.3 Approvals Required

In addition to Design Committee approval, all exterior changes and additions to existing structures that require a building permit also require ASCC approval. Check with the Town Planning Coordinator on the necessity for a Town building permit. Current building codes have specific requirements with respect to each of the external elements discussed above. The homeowner should be familiar with these requirements before presenting plans to the Design Committee. By using only those materials and designs that are permitted in applicable building codes, the homeowner will save time and expense, both at the Town and at the Design Committee.

## *Exhibit 3.4.1—Typical Building Components*

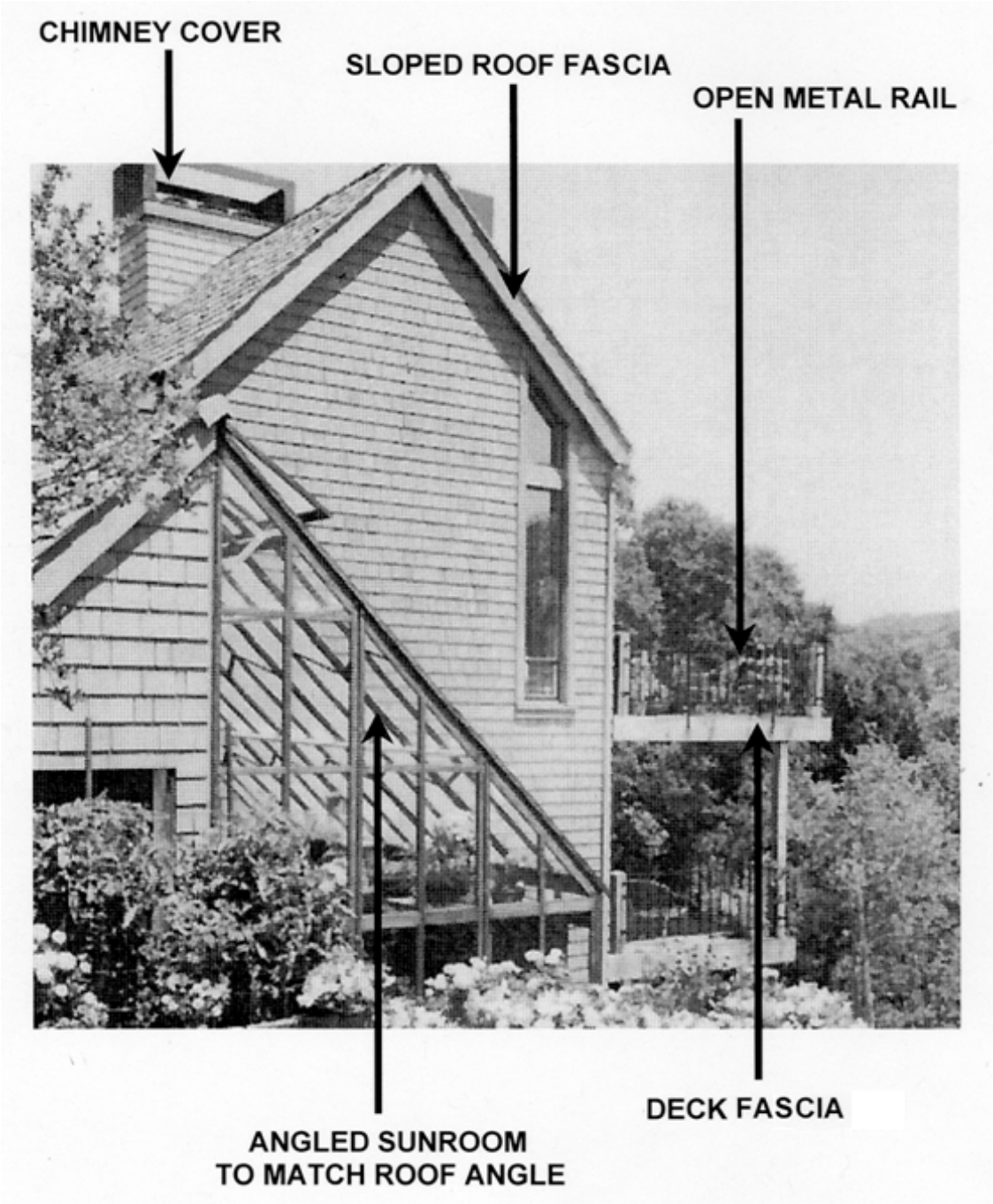

## *Exhibit 3.4.1—Typical Building Components (Continued)*

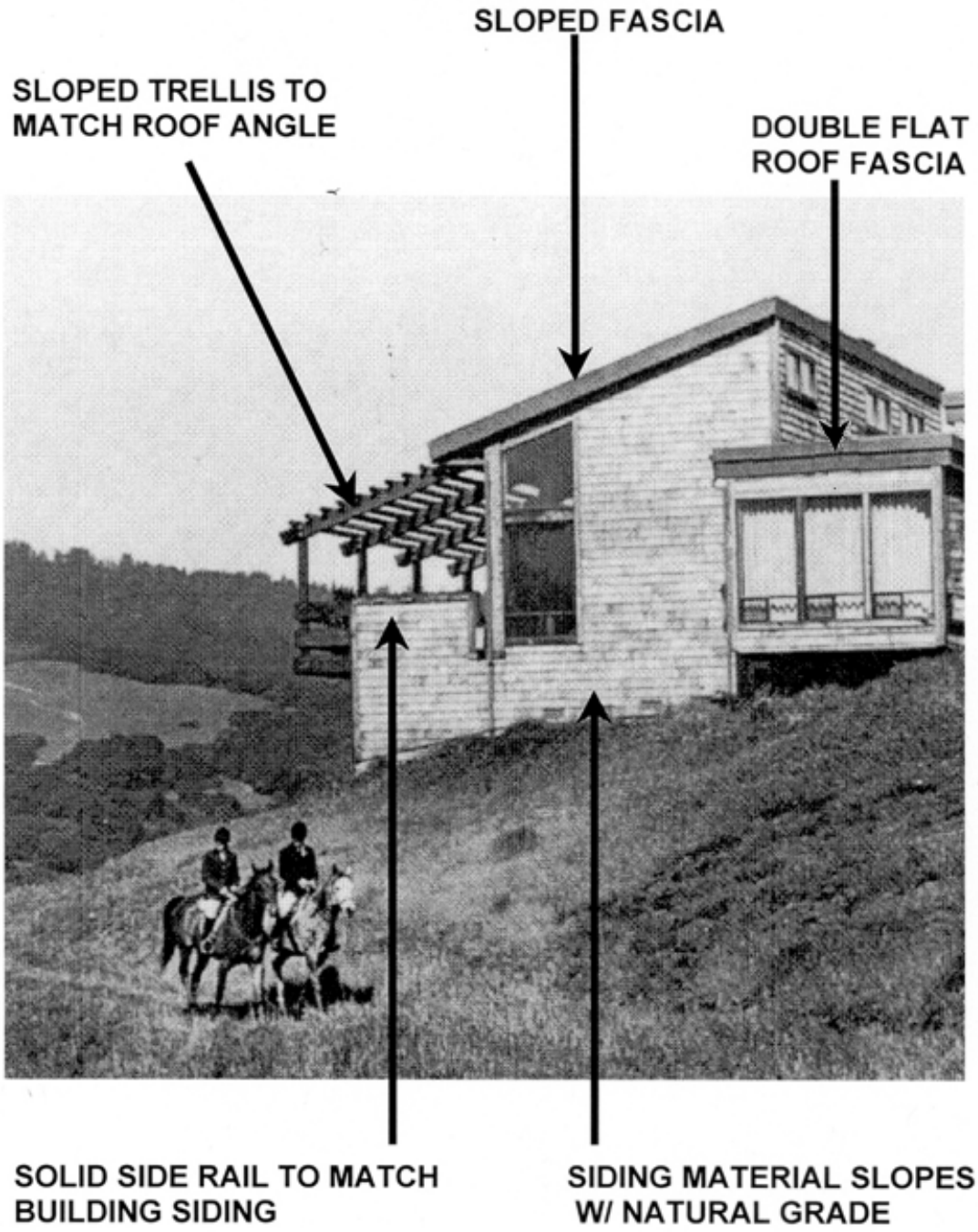

## *Exhibit 3.4.2.2—Example: Flat Roof Fascia*

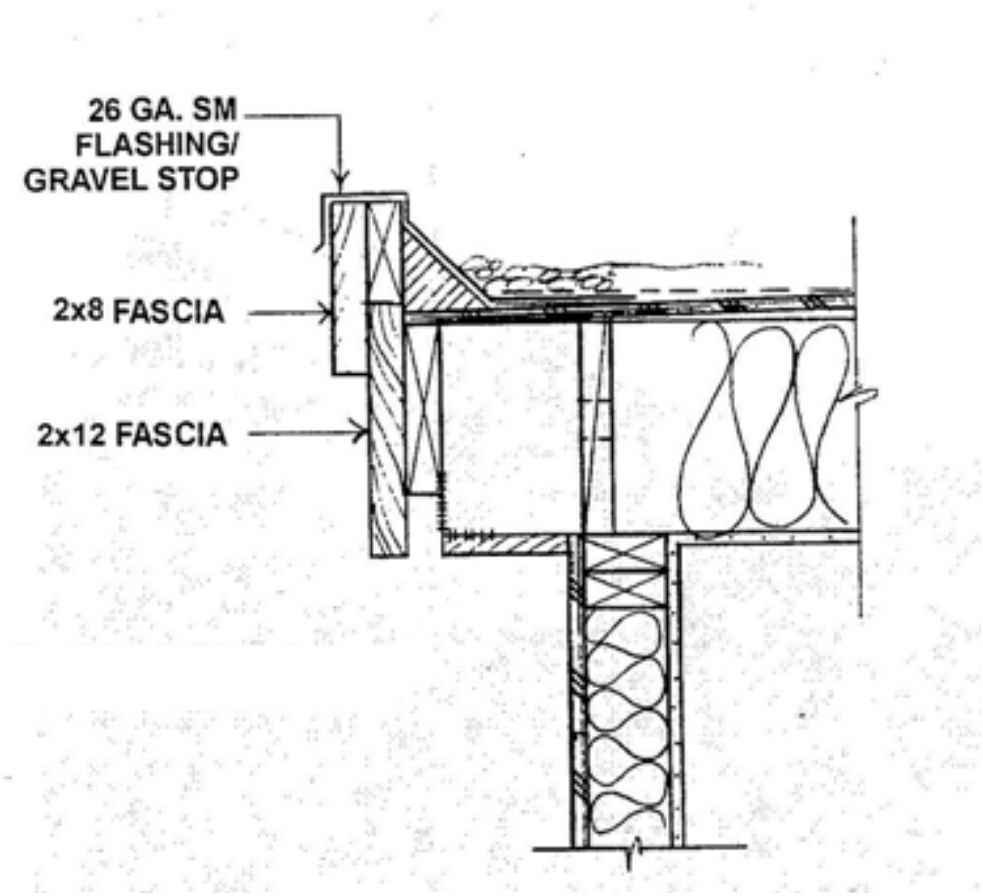


**NOTE: Open eave construction no longer allowed**

## *Exhibit 3.4.2.2—Example: Sloped Roof Fascia*

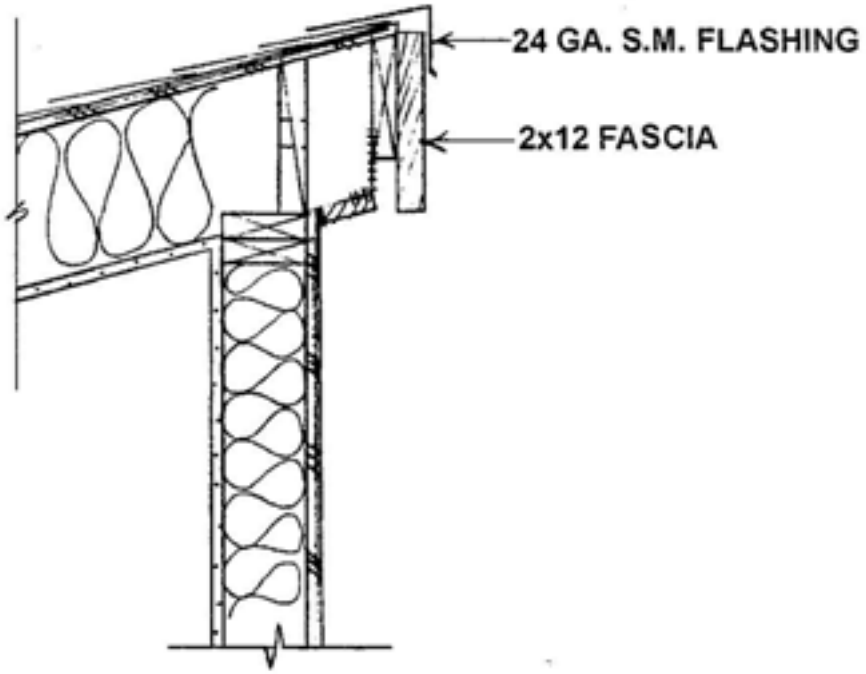


**NOTE: Open eave construction no longer allowed**

# *Exhibit 3.4.2.6—Standard Detail—Solar Screen*

**Example of Fabric Window Solar Screen**

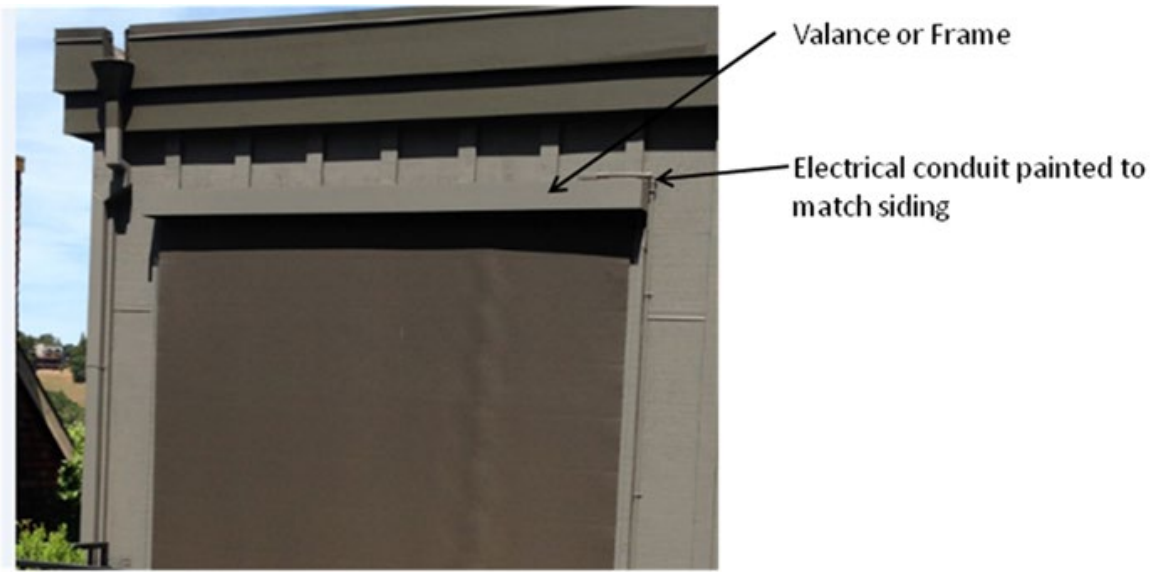


**Example of Metal Rolling Shade**

# *Exhibit 3.4.2.6—Standard Detail—Solar Screen (Continued)*

**Example of Retractable Solar Shade over Trellis**

**NOTE: Non-combustible or ignition-resistant materials required for new/replacement trellises**

# 3.5—Decks & Patios and Related Railings and Trellises

Please note that the Design Guidelines, including Exhibits, describe requirements and designs that may be superseded by updated Town, State, and Fire District building codes. As a result, residents and their contractors are responsible for ensuring compliance with all current building codes and requirements.

## 3.5.1 Concept Statement

### *3.5.1.1 Decks*

Decks are an integral part of the Ranch concept. Most houses are situated to take advantage of views from decks. Because Ranch houses generally do not have patios and grass areas, decks serve the same functions. Therefore, decks are acceptable additions to existing houses provided that they adhere to the following design guidelines and do not interfere with a neighbor's views or privacy. (See Exhibit 3.5.1 for Typical Deck and Trellis Components.)

### *3.5.1.2 Patios*

In some situations, ground level patios not attached to the house are also acceptable and can become the "retreat area" described on original optional landscape plans for each house. For patios, views are less of a consideration and the prime consideration is effect on neighbors in terms of location, size and surface materials. Large areas of impervious surface are not encouraged and location of patios must not impinge on neighbors' privacy nor be highly visible to neighbors or to public areas. All decks and patios must meet Town standards and the special provisions of the PUD including decks that extend beyond the building envelope.

### *3.5.1.3 Visual Impacts*

Openness is the preferred concept with respect to decks including railings and trellises. Although solid railings are permitted in certain situations, open railings are encouraged. In all cases, materials and colors must be compatible with the existing structure and must be chosen to blend with the natural surroundings of the deck or patio.

## 3.5.2 General Design Concepts

See Section 3.2 for a discussion of acceptable colors and finishes of all structures discussed in this section.

### *3.5.2.1 Deck and Patio*

Deck and patio surfaces must be made with natural materials or manufactured materials that give the appearance of natural materials (see Section 3.5.4.1 and Exhibit 3.5.2.1). The Town requires the use of non-combustible or ignition resistant materials (as defined byTown requirements) for improved home hardening (fire safety). Edges of surface deck boards and supporting joists must be covered with a fascia board so that ends and edges of the deck surface and support joists are not visible. In addition, the Town requires that decks or similar structures that are 4' or less above grade must be enclosed from the underside to grade with solid, non-combustible or ignition resistant material.

Patio and deck surface area should be of a size consistent with its permitted intended use and patios should be landscaped to reduce visibility to neighbors and public areas. The footprint and materials used for all decks, trellises, railings, and patios require Design Committee approval. Generally, all decks and associated railings on a lot should be constructed with similar or compatible design, color, and materials. Similarly, any gate inserted into a railing should be constructed with similar or compatible design, color, and materials.

### *3.5.2.2 Deck Railings*

Railings must be composed of non-combustible materials (*e.g.*, metal, cable) for improved home hardening (fire safety). Wood support posts are allowed if a minimum of 6”x6”. Existing wood railings using non-Class A materials or small dimension lumber are grandfathered, however, as they require replacing, non-combustible materials must be used. Glass railings are also allowable. Solid railings are discouraged. If a solid railing is approved by the Design Committee, the railing material and color must match the exterior of the house. Solid railings will normally only be approved on lower level decks or in situations where there would be visibility into the interior of the house from public areas, and only then if the solid rail does not significantly add to the mass of the structure. Deck railings in excess of 42 inches high will not ordinarily be approved. Open railings may be designed in a geometric system of straight lines with either a vertical or horizontal orientation, and the design must convey a sense of openness. The Design Committee will follow the standards set forth in Section 3.5.4.3 in evaluating railing designs (see Exhibit 3.5.2.2). Generally, all decks and associated railings on a lot should be constructed with similar or compatible design, color, and materials.

### *3.5.2.3 Deck Trellises*

Trellises over decks may be made from wood, metal, or cable railing. The use of non-combustible or ignition-resistant materials is required by the Town. Any horizontal wood trellis shading element placed on top of structural supports must meet the requirements of the Town and Woodside Fire for fire resistance. Trellises should be primarily open with at least 50% open to the sky. If additional shade is required in certain situations, retractable shade material may be placed over the trellis, but care should be taken to use ignition-resistant material if possible, in the event that shades are not retracted during a fire event. Solid materials covering trellises are not permitted unless they are retractable. All trellises will generally be supported with vertical posts that are placed to match existing structural elements but may also be cantilevered from the house structure. (See Exhibit 3.5.2.3)

### *3.5.2.4 Other Trellises*

Trellises attached to structures will normally be permitted to provide architectural interest, to provide shaded entry ways, garage/carport overhangs and in conjunction with container landscaping. Free standing trellises may be used to shade patios and walkways and are usually used in conjunction with landscaping installed for the same purpose. Trellis designs vary greatly and will be considered on an individual basis. Curved forms are not permitted, and each trellis should maintain and enhance an open feeling in its particular installation.

### *3.5.2.5 Under Deck or Cantilevered Structures*

Areas beneath decks or cantilevered areas should generally be left open (except to screen hot tubs) and should be as unobtrusive as possible.

However, the Town requires decks or cantilevered structures that are 4’ or lower (average height measured from top of the deck to grade) must be enclosed from the underside with solid, non-combustible or ignition resistant material for improved home hardening (fire safety). For cantilevered appendages above 4’ from grade, the underside must be protected with non-combustible or ignition-resistant material. For all other decks, depending on the height and location where the enclosure is desired, the chosen screening material should reduce the sense of massing and allow for a feeling of openness to conform to the Ranch aesthetic. Any screening material must be non-combustible or ignition resistant. New wood privacy screens are not allowed due to fire risk unless done with an ignition resistant material (as defined by Town requirements) or a non-combustible material such as metal. Residents are strongly encouraged to replace any existing wood lattice or small dimension lumber enclosures with non-combustible or ignition resistant material. Screening may be slightly recessed under the edge of the deck to further reduce the visibility. Consideration should be given to creating a “door” or some other mechanism to access the under-deck area.

See Section 3.7.2.1 for discussion of dog runs under decks, and Section 3.7.2.2 for privacy screens

### *3.5.2.6 Deck Supports*

Decks must be supported on vertical or angled posts (minimum size for wood posts is 6”x6” or 8”x8” heavy timber) spaced as far apart as is consistent with safe design, to increase the feeling of openness. Decks may also be cantilevered. Cross bracing between support posts using large structural members is allowed if installed perpendicular to the house wall (generally not visible), but not parallel to the house wall (*i.e.*, in the vertical plane) unless required for additional structural support. Other such bracing methods must be the minimum required for a safe design. Other less visible options should be considered.

### *3.5.2.7 Deck Stairs*

Lower level decks may be connected to the ground by stairs. If stairs are desired from the upper deck to the ground, consideration should be given to location to reduce massing and to not interfere with visual sight lines from surrounding neighbors. Such stairs should be done with a material consistent with the deck or other non-combustible or ignition resistant material and include a handrail system that is compatible with the deck railing. (See Exhibit 3.5.2.7) Open risers are generally required, however, depending on location, closed risers or open risers screened with 1/8” wire mesh may be considered where leaf accumulation under the stairs cannot be easily cleared.

### *3.5.2.8 Hardscape, Pathways, Steps, and Driveways*

Hardscape (*e.g.*, solid appearing pathways, particularly if made of non-natural appearing substances such as concrete or stone) are permitted only if approved by the Design Committee. Such hardscape is generally only allowed in walkways from the street, in front entries or around patios. The Design Committee understands that natural materials may vary considerably in color, therefore a sample representative of that proposed to be used must be submitted as part of the Application process. (See Exhibit 3.5.2.8.)

Other pathways or steps around structures intended to facilitate navigation of sloped paths may be installed without Design Committee approval. Such pathways or steps may be done with infrequently spaced stepping stones of redwood rounds, up to 8”x8” lumber, dark colored stepping stones, tree bark or other dark natural materials. Residents should keep in mind the flammability of these materials (*e.g.*, the finer the tree bark, the more flammable).

With Design Committee approval (using a no fee Fast Track application), gravel/rock may be applied around structures in select sections up to a width of 5 feet from the foundation for improved fire safety, provided it is kept free of weeds and debris. The gravel/rock should be rough in texture, generally monochromatic or all rocks in the same general color tone, and a neutral color compatible with earth or other landscape tones (*e.g.*, tans, grays, brown). These materials may also be used in areas under decks and cantilevered portions of structures, including carports and garages (see Section 3.1.3.11 and Exhibit 3.1.3.11.) Installation of gravel/rock for this purpose is different from the installation of larger flat stone “pavers” (or fragments of such) to create a solid appearing pathway; such a project requires a Standard application as noted above.

Driveways on the Ranch are generally asphalt, concrete or aggregate. Other materials may be proposed for consideration by the Design Committee. Any modification other than black resurfacing or slurry sealing of existing asphalt driveways requires Design Committee approval.

## 3.5.3 Design Details

Fires can start on a deck from embers that get caught at the connection points of deck boards with joists or where leaves have accumulated between deck boards or in corners. You should consider these factors as you design your deck to minimize the potential for leaf and debris accumulation.

### *3.5.3.1 Deck Fascia Boards*

Fascia boards on the edges of decks must be the same size as fascia boards used on adjacent decks or on the house. They must be large enough so that the ends and edges of the deck boards and support joists are not visible, and there is no seam showing between the ends of the deck boards and the fascia.

### *3.5.3.2 Railing and Trellis Structural Member Details*

Deck railings and trellis supports must provide square, beveled or chamfered ends on all members including posts. Rounded ends are not acceptable. If chamfered or beveled ends are used, the chamfer or bevel must follow the designs as illustrated in Exhibit 3.5.3.2A and 3.5.3.2B which illustrate various styles of acceptable designs. Metal caps may be placed on the tops of posts provided they are painted the same color as the posts or other elements of the trellis or railing or are copper and allowed to weather (see Exhibit 3.5.3.2B.)

### *3.5.3.3 Trellis Details*

Wooden trellises must be supported by 6”x6” or 8”x8” heavy timber or metal posts, and cross beams fastened to the vertical posts may be either parallel or perpendicular to the house wall. The use of non-combustible or ignition-resistant materials are required by the Town. Trellises may also be constructed from metal; support posts may be made from wooden posts with wooden cross beams or metal posts may also be used. Trellises constructed with metal members (structural posts and trellis shading elements) should have a design consistent with the Ranch aesthetic and will generally involve using dimensions similar to the current wood trellis dimensions. The shading elements of a trellis may be parallel with the deck, or, if an extension of a roof line, may follow the same slope as the roof. If the trellis shade elements are sloped, then the ends at the outer edge of the trellis may be square or plumb cut, so as to be perpendicular to the deck surface, or chamfered. (See Exhibit 3.5.3.3.)

### *3.5.3.4 Deck Support*

Deck support wood posts must be 6”x6” or 8”x8” heavy timber. Metal support posts may also be used.

### *3.5.3.5 Siting of Decks and Patios*

The outer edge of any deck must be built within the building envelope for the site unless a variation is approved by the Design Committee and the Town ASCC. (See Section 3.3.2.3 for exception to the Town averaging provision.) Any deck or patio from which a direct view into a neighbor's house may occur may be required to be shielded with a privacy screen or landscaping sufficient to block the view. Addition of a ground level patio meeting these criteria does not require Town approval but does require Design Committee approval.

## 3.5.4 Materials

### *3.5.4.1 Deck and Patio Structure Materials*

For any new or replacement deck, the Town requires the use of non-combustible or ignition resistant (as defined by Town requirements) materials to improve fire safety. If slate, tile, or manufactured products are used, they should be laid with little or no grouting so that the surface gives a solid as opposed to a patterned appearance.

### *3.5.4.2 Use of Metal Members*

Metal is permitted for use as structural posts/fascia, trellis members, or stairs. Trellises constructed with metal members (structural posts and trellis shading elements) should have a design consistent with the Ranch

aesthetic and will generally involve using dimensions similar to the current wood trellis dimensions. (See Section 3.5.3.3 for design and use considerations)

#### *3.5.4.3 Deck Railings*

Any new or replacement deck railings must be composed of non-combustible material (*e.g.*, metal, cable) for improved fire safety. Wood support posts are allowed if a minimum of 6”x6”. Existing wood railings using non-Class A materials or small dimension lumber are grandfathered, however, as they require replacing, non-combustible materials must be used. Glass railings are also allowable. Materials must be used that will not warp or sag in the specific situation. Vertical posts on which a deck railing is supported and top and bottom rails must be square or rectangular in cross section. Vertical support members between posts should be the same shape in cross section as the vertical posts. Individual deck rails (which may be either vertical or horizontal) may be square, rectangular or round in cross section (*e.g.*, pickets, cable railing, etc.). To meet code requirements, railings with vertical wood pickets may be made to conform by adding metal pickets between the existing wood pickets. Horizontal cables stretched between posts may also be used provided the posts and other vertical supports are spaced so that the cables do not sag.

## 3.5.5 Approvals Required

#### *3.5.5.1 New or Expanded Decks/Trellises*

All new decks or trellises or additions to existing decks/trellises, such as enlarging a deck area or adding a new trellis or a new railing, require the approval of the Design Committee, the ASCC and the Town Building Department. Please note that building codes controlling height and spacing of railings and fire resistance of the substructure have changed since most Ranch houses were built. As a result, special rules may apply to existing railings when new construction is permitted or updating your substructure may be required to meet fire safety codes.

#### *3.5.5.2 Deck/Trellis Replacements*

Design Committee review and approval is required for all modifications to or replacements of existing decks, substructures, trellises, or railings. Town Building Department approval may also be required, and homeowners should check with the Town.

#### *3.5.5.3 New Patios*

Addition of ground level patios do not require Town approval but do require Design Committee approval.

#### *3.5.5.4 Modification to Driveways*

Design Committee review and approval is required for any modification other than black resurfacing or slurry sealing of an existing asphalt driveway.

## *Exhibit 3.5.1—Typical Deck, Railing, Trellis Components*

## *Exhibit 3.5.2.1—Example: Deck and Patio Design*

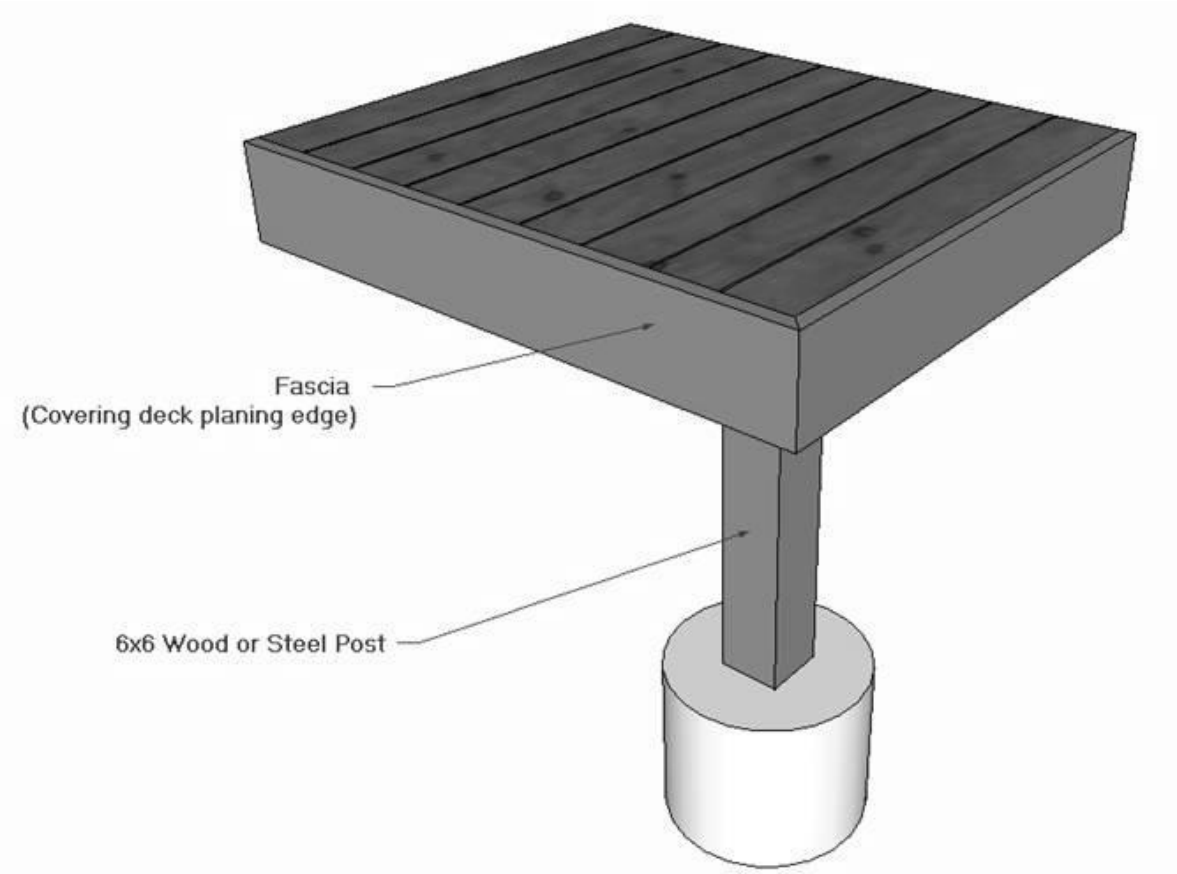


**NOTE: Deck surfaces must be non-combustible or ignition-resistant**

## *Exhibit 3.5.2.1—Example: Deck and Patio (Stone)*

# *Exhibit 3.5.2.2—Example: Metal Picket Deck Railing*

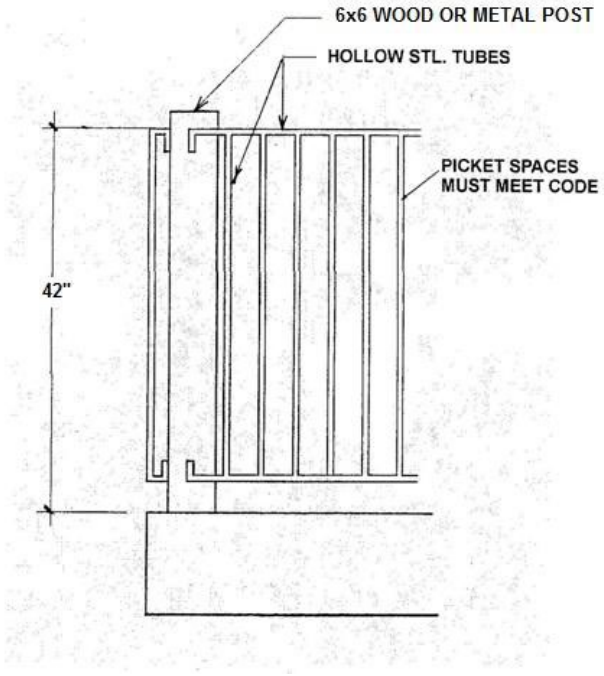


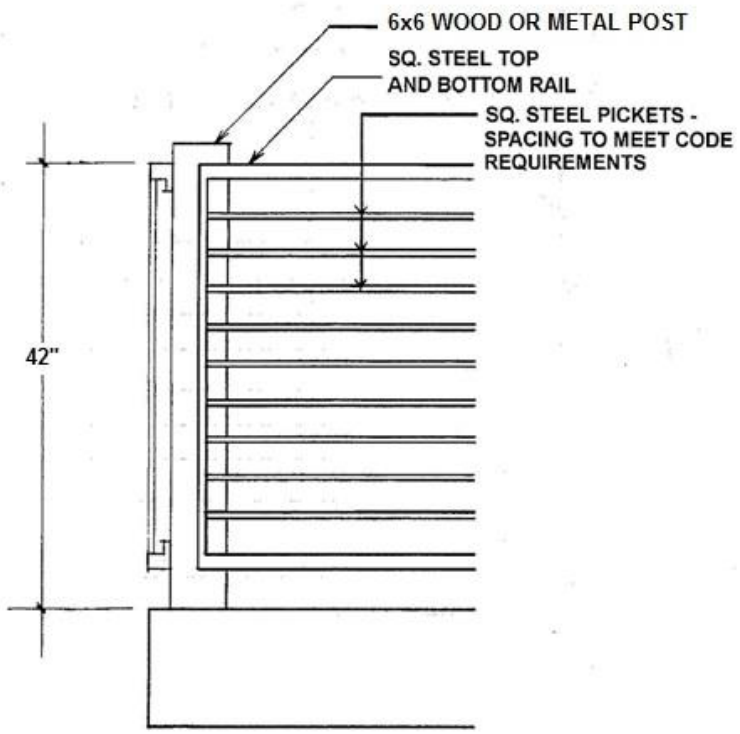

# *Exhibit 3.5.2.2— Example: Wood or Metal Deck Railing*

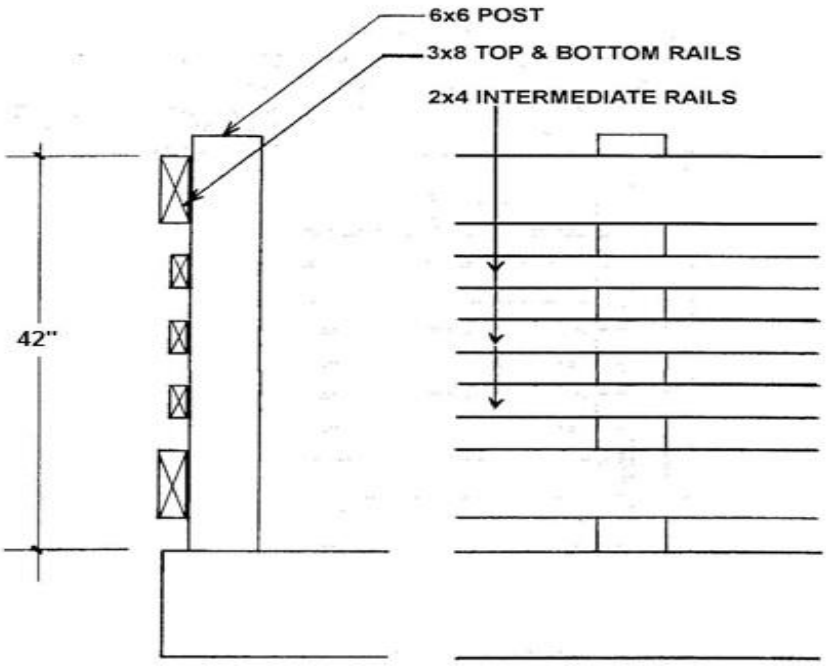


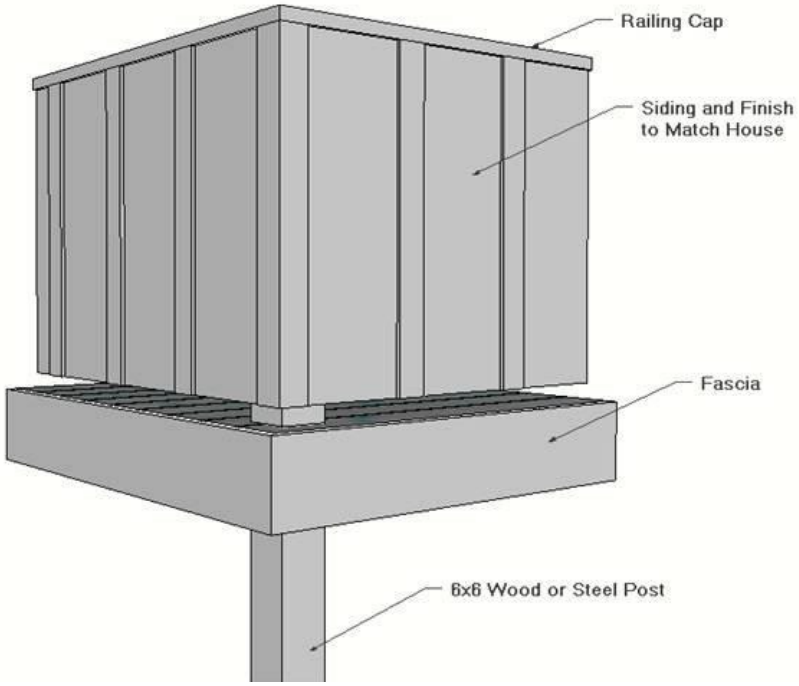


**NOTE: Deck railing materials must be non-combustible**

# *Exhibit 3.5.2.2—Example: Cable Deck Railing*

**NOTE: Any wood components must be ignition-resistant**

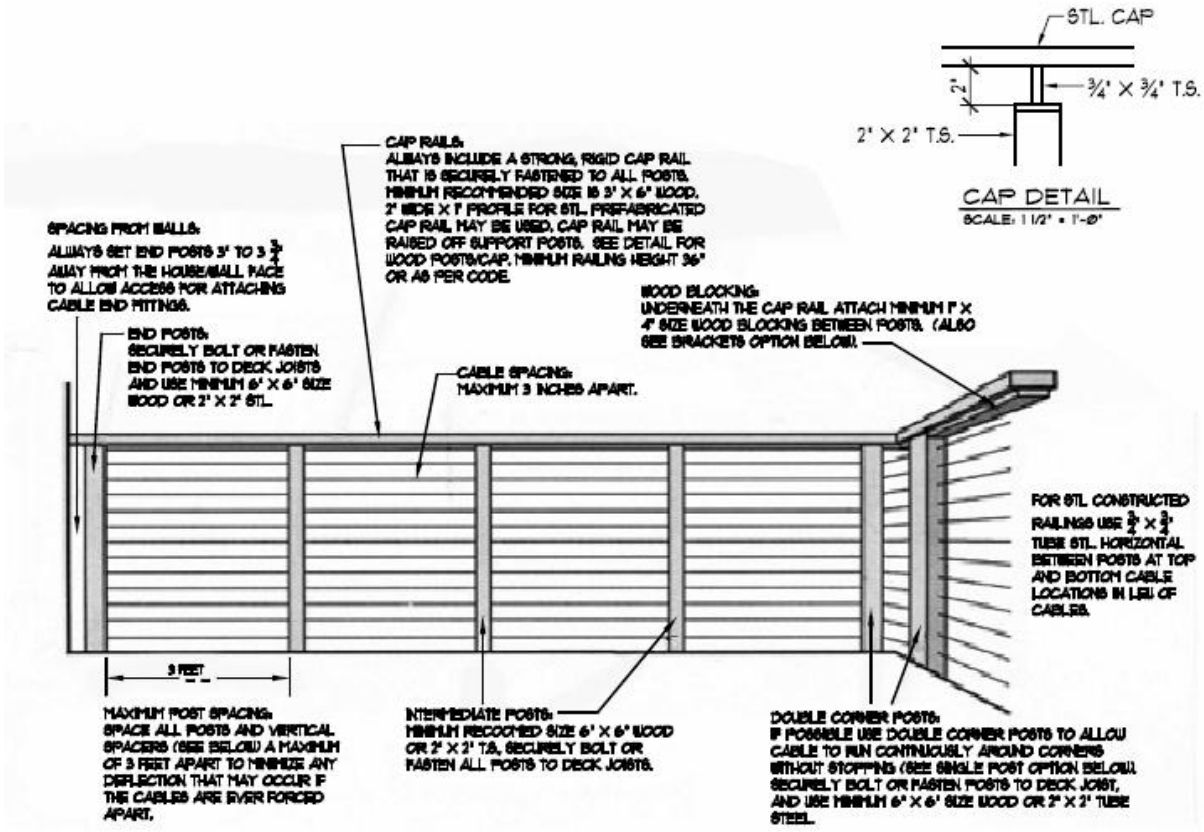


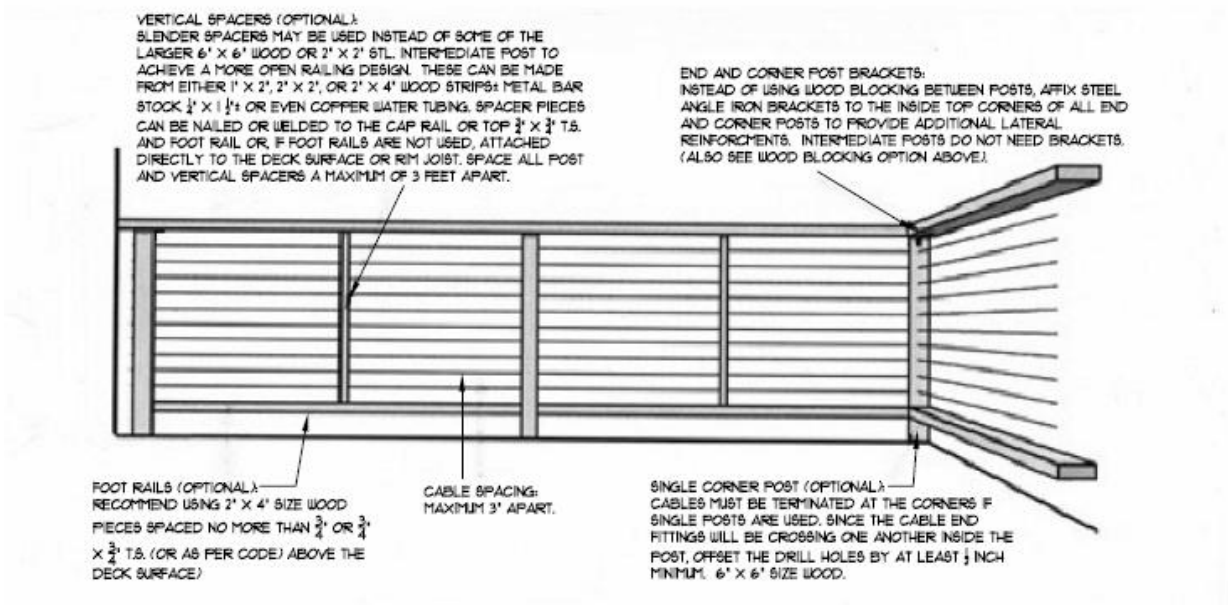

# *Exhibit 3.5.2.2—Example: Cable Deck Railing (Continued)*

## POST

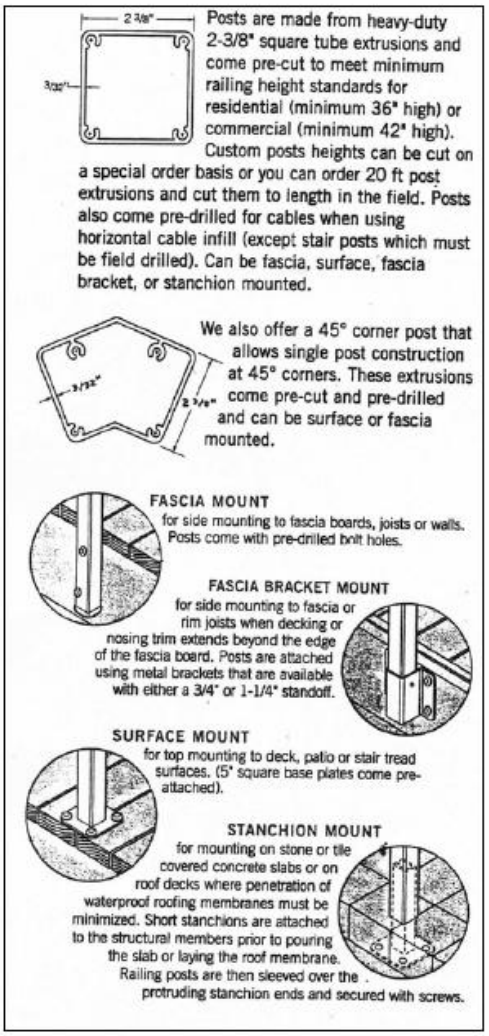


## CAP RAIL

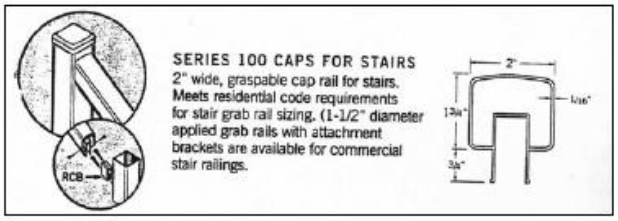


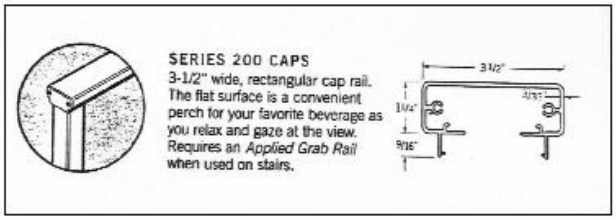


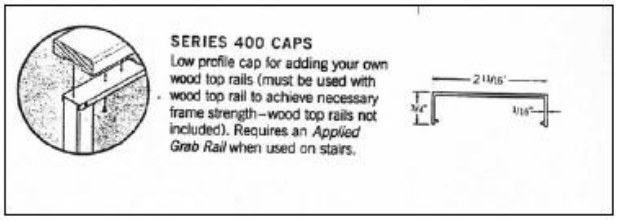


ABOVE DRAWINGS ARE EXAMPLES AND ARE NOT TO SPECIFY ANY MANUFACTURER OR SPECIFIC PRODUCT AND SHALL BE UNDERSTAND AS AN EXAMPLE

# *Exhibit 3.5.2.3—Example: Trellis Design*

**NOTE: Non-combustible or ignition-resistant materials required**

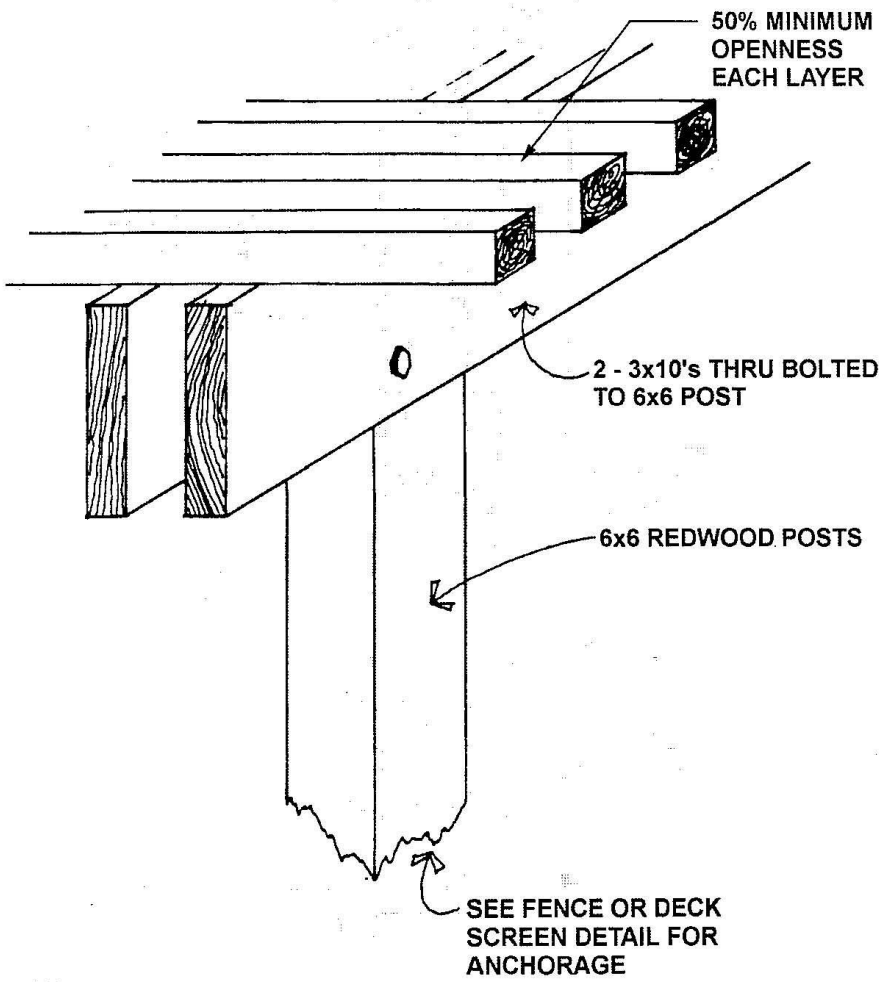

# *Exhibit 3.5.2.3—Example: Sloped Deck Trellis Design*

**NOTE: Non-combustible or ignition-resistant materials required**

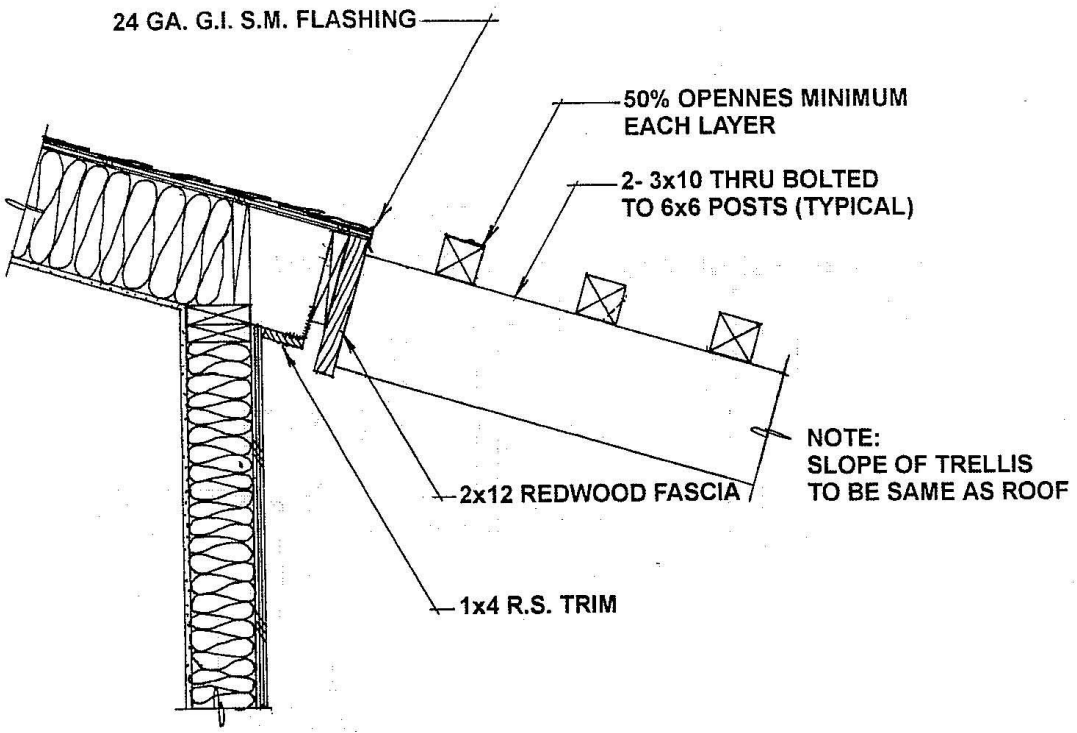

# *Exhibit 3.5.2.7—Example: Exterior Stairs Deck to Deck Design*

**NOTE: Non-combustible or ignition-resistant materials required**

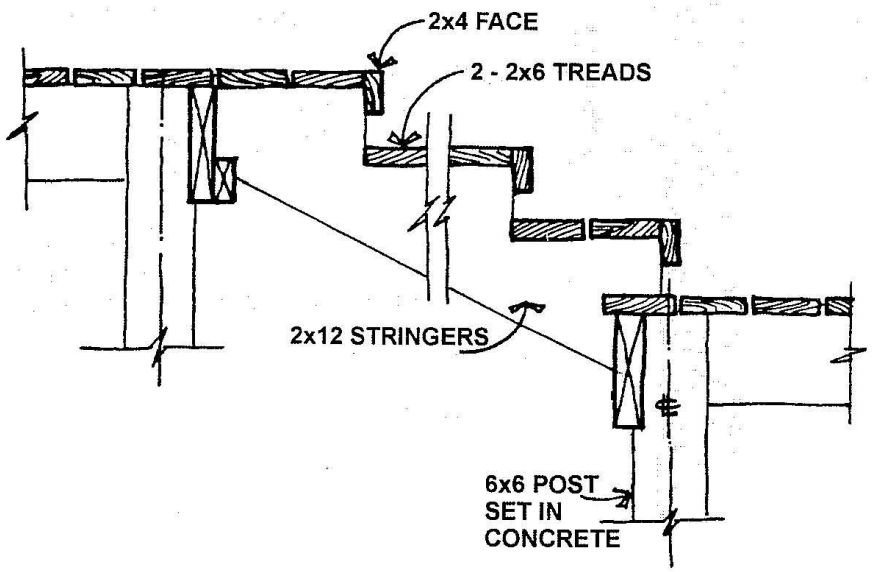

# *Exhibit 3.5.2.7—Example: Exterior Stairs Deck to Ground Design*

**NOTE: Non-combustible or ignition-resistant materials required**

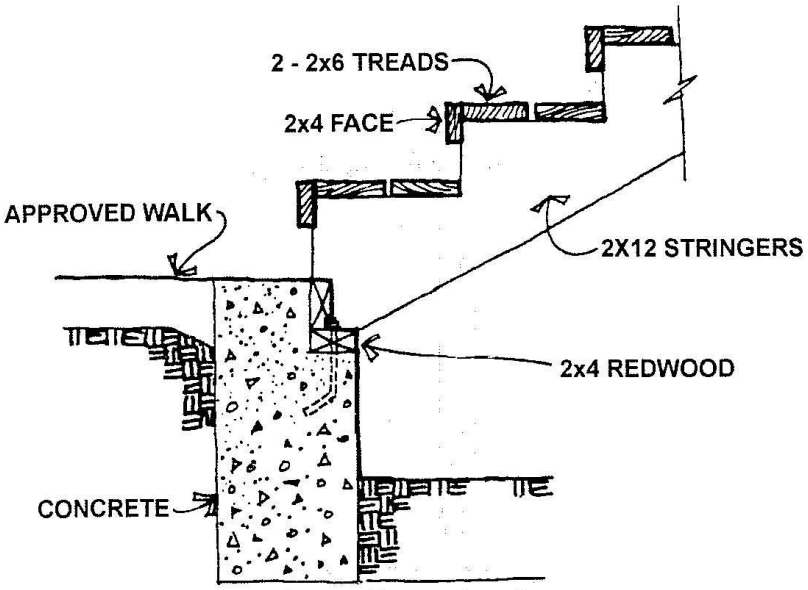

## *Exhibit 3.5.2.8—Example: Stone for Pathways/Front Entries*

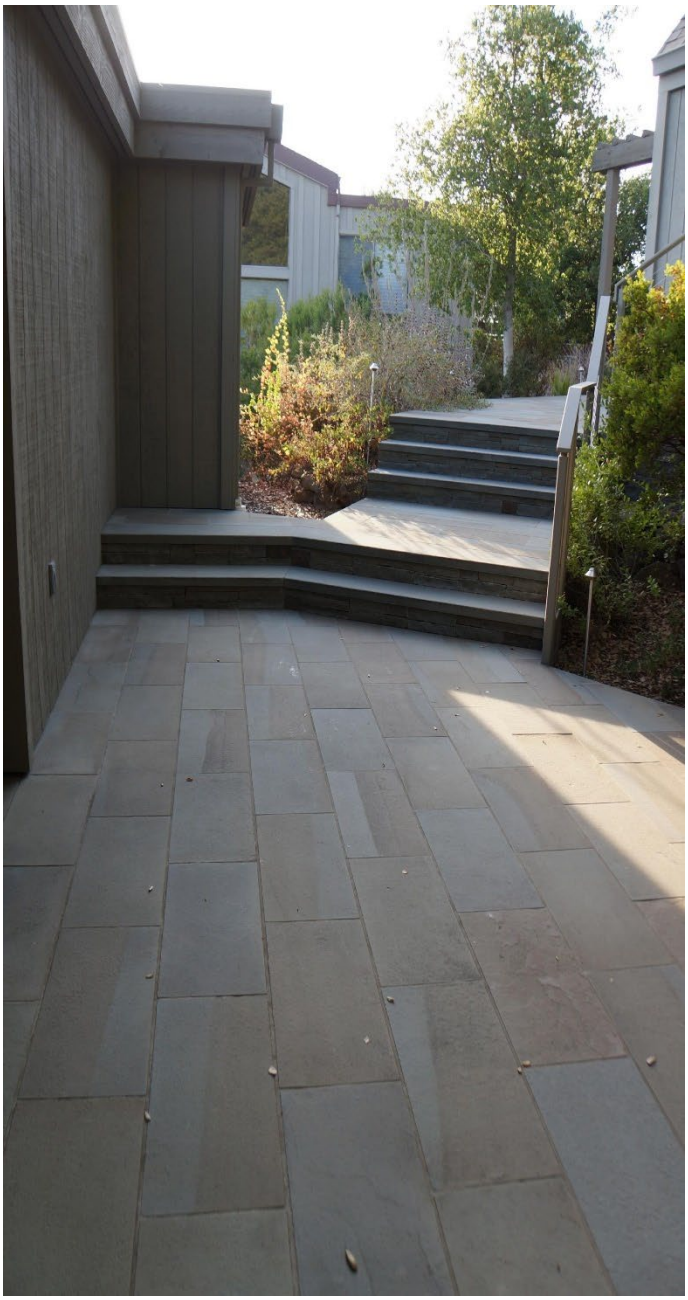

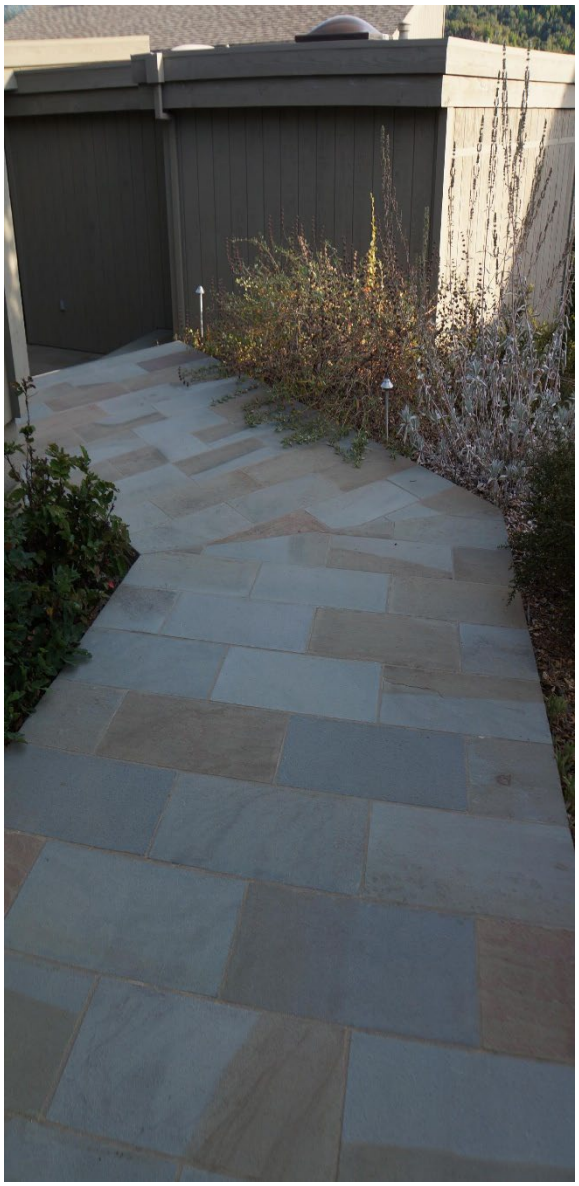

## *Exhibit 3.5.3.2A—Chamfered Ends*

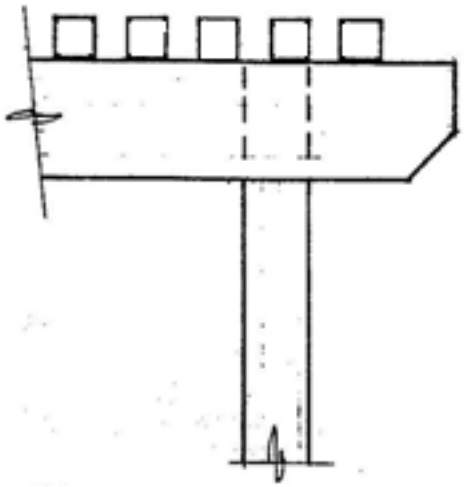

CHAMFERED TRELLIS SUPPORT

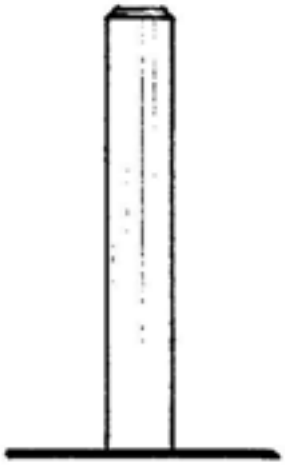

CHAMFERED POST TOP

# *Exhibit 3.5.3.2B—Typical Post Tops*

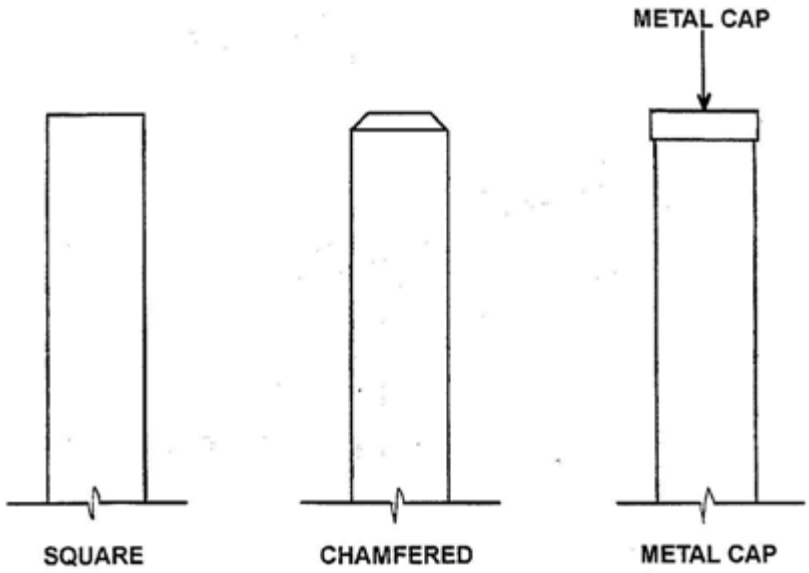

# *Exhibit 3.5.3.3—Trellis Support Ends*

**NOTE: Non-combustible or ignition-resistant materials required**

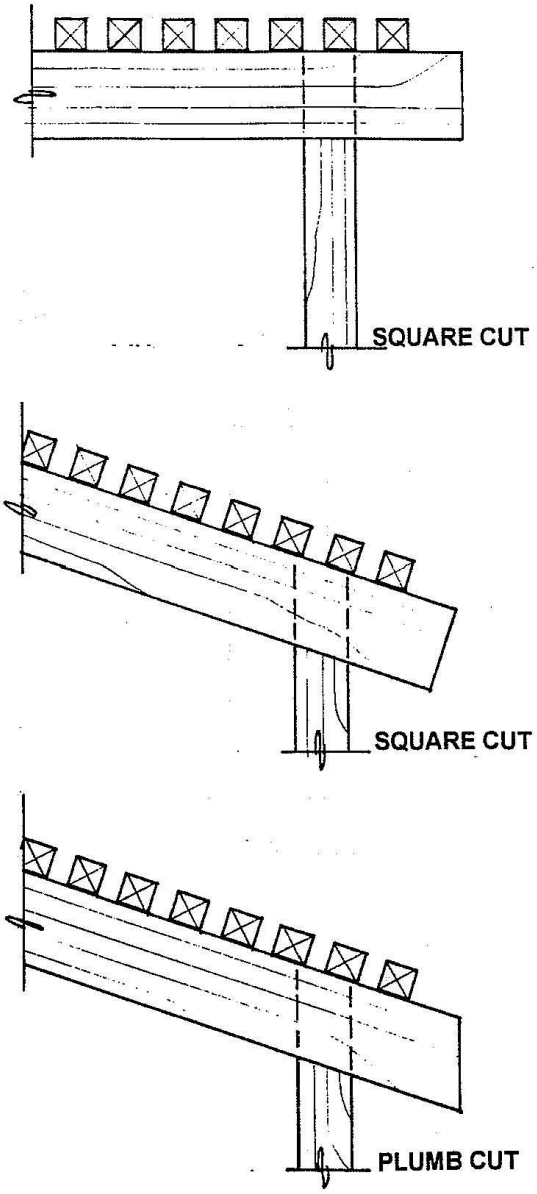

# 3.6—Auxiliary Structures

## 3.6.1 Concept Statement

The design concept for an auxiliary structure is based upon the premise that the visual impact of such structures is consistent with the overall Ranch design concept as set out in Section 1. Auxiliary structures should be designed to match the existing structure to which they are attached in design, material and color. In instances where this is not possible, the auxiliary structures should be designed as specifically discussed below. Homeowners are encouraged to minimize the use of auxiliary structures other than required for access to the home or for safety and environmental reasons. In all instances, additional landscaping may be required to mitigate adverse visual impacts. Auxiliary structures are counted in determining a maximum impervious surface coverage permitted on a lot by the PUD Statements. The Town standard will be applied to define "impervious surface."

## 3.6.2 Service Areas

Service areas are defined as open fenced areas, as compared to service structures, which are enclosed structures. Service areas are used for garbage cans, firewood, tools and miscellaneous equipment and are allowed only as described in this Section. Note that Woodside Fire does not allow exposed firewood or lumber piles within 30’ of any structure, but such piles must be completely covered and secured to the ground with a certified fire-retardant material that will not allow embers to penetrate. Exposed wood piles or other combustible materials must be greater than 30’ from any structure. Any service structure (whether free standing or attached to an existing structure) must meet all of the conditions described in Section 3.3.

## 3.6.3 Garbage Can Enclosures

On occasion, garbage cans must be placed in areas other than existing fenced service areas or approved carport storage units. While the preferred location is either in an existing carport enclosure or garage, if this is not possible, separate garbage can enclosures may be used. If garbage cans are within the 0-5’ zone of a structure, the enclosure must be solid and completely enclosed to prevent ember incursion. The material must be consistent or compatible with the siding of the home and be non-combustible. The enclosure should be sized to just contain the garbage cans.

## 3.6.4 Hot Tubs

Hot tub selection should be limited to those providing low-noise operation as hot tub circulation equipment can generate noise levels that may be offensive to neighbors. When selecting a location and privacy screening for the hot tub, the privacy of the homeowner and neighbors is a primary concern. This screening might also be needed for sound level reduction. In keeping with the Town’s noise ordinances (Title 9, Chapter 9.10) pump/circulation noise should be less than 55 dBA Sound Pressure at the property line. Privacy and equipment screens are covered under Section 3.7; reference should be made to that section in providing a design to achieve these objectives. To realize the above considerations, homeowners should be prepared to offer alternate locations for a hot tub when submitting an application to the Design Committee.

## 3.6.5 Air Conditioning Units, Heat Pumps, Generators, Electric Car Chargers, Rechargeable Solar Home Batteries

### *3.6.5.1 Location and Screening*

Air conditioning compressors, tanks, pumps, generators, electric car chargers, solar home batteries and other similar mechanical or electrical equipment should preferably be positioned to reduce visibility from adjoining property or streets. If necessary, fencing or screening consistent with the appearance of the home should be installed to reduce visibility and to reduce any possible noise. (See Section 3.7.)

### *3.6.5.2 Air Conditioners and Heat Pump Equipment*

As of January 2023, the Town requires that outdoor heat pumps ("reverse cycle air conditioning condensing units") be used when an older AC condenser unit needs to be replaced or when a new AC system is installed (Section 15.04.080 Portola Valley Municipal Code). Design Committee approval is required for the addition of a new heat pump or replacement of any heat pump.

On the Ranch, heat pump equipment must be rated by the manufacturer at noise levels equal to or less than 64 dBA Sound Pressure (measured at 1 meter with 1 reflecting surface or equivalent) or 72 dBA Sound Power. Depending upon the number of reflecting surfaces and proximity to neighboring homes, quieter units or additional sound screening may be required by the Town to meet their exterior noise requirements. Portola Valley Municipal Code Section 9.10.030 stipulates that noise shall not exceed 55 dB at the property line or by a receiving property. When heat pumps are placed within 50' of a neighboring home, units with noise levels less than 58 dBA Sound Pressure or 66 dBA Sound Power should be considered.

As background, air source electric heat pumps, when coupled with an appropriate air handler, can provide both heating and air conditioning. Unlike air conditioners that run only during the summer and usually only during the day, heat pumps can run virtually year-round and 24 hours a day for both daytime cooling and nighttime heating. Due to the low-level ambient noise and close home-to-home spacing on the Ranch, very careful consideration is needed regarding the decibel ratings of the equipment and its location.

Heat pump manufacturers typically provide maximum noise level values for Sound Power and/or Sound Pressure. Sound Power is the total sound wave power emitted by the heat pump, independent of placement or surroundings. Sound Pressure is a measurement of the sound wave pressure experienced by a listener's ears at some distance from the unit. The Sound Pressure value is usually specified at a distance of 3 feet or 1 meter, with one reflecting surface and no other adjacent reflecting surfaces.

### *3.6.5.3 Generators*

If a generator is permanently installed, there are safety and regulatory requirements that must be met to ensure the continued safety of users, their neighbors and utility company service personnel. For example, the homeowner must inform the utility of its presence, install auto transfer switches and firemen's safety switches. The homeowner is responsible for the safe location, installation, operation of generating equipment, and any proposed fire-safe sound enclosure/or proposed fire proofing of siding; and must have Town approvals for any such installation. (See Section 3.7 for screening requirements.)

Generators must be rated at 65 decibels or less for noise based on the Town of Portola Valley noise ordinance (as measured 22 feet from the unit). Any generator maintenance testing must be limited to a maximum of 20 minutes from Monday to Friday between 10 am and 4 pm per the Town's noise ordinance. Design Committee approval is required for the replacement of any generator or the addition of a permanently installed new generator.

### *3.6.5.4 Electric Car Chargers*

Design Committee approval is required for the installation of an electric car charger (and separate Time of Use Meter, if applicable) if located in an open carport or in a location outside of a structure that is for the owner's

exclusive use. Location and color of electric car chargers should minimize visibility from the street or from adjoining neighbors. Neutral colored equipment is preferred, it may be painted, or a transparent vinyl wrap may be applied to darken the appearance, if allowable. Any electric vehicle charging station must comply with California Building Standards Code.

If a homeowner wishes to install a charging station in a common area or any location that is not for the owner's exclusive use, the homeowner should contact the Ranch Office.

#### *3.6.5.5 Solar Home Batteries*

Rechargeable solar home batteries and associated equipment should preferably be located to minimize visibility from the street or from adjoining neighbors. Visual screening may be required depending on location, color and reflectivity of the equipment. If allowable, a transparent vinyl wrap may be applied to darken the appearance. Design Committee approval is required for the replacement of any exterior or open carport home battery or the addition of a new home battery.

### 3.6.6 Children's Play Equipment

#### *3.6.6.1 Play Equipment*

Children's play equipment is allowed under certain circumstances with Design Committee approval of the aesthetics. Play equipment must not interfere with the view of neighbors and must be located on the E-1 portion of the homeowner's lot. The play equipment should be consistent with the overall design of the Ranch. The equipment should be a color that is consistent with the Ranch approved color schemes. To the extent possible, house body colors should be used for all plastic components associated with the play equipment; alternately, the plastic equipment may be painted to ensure color compatibility. The overall height should be limited to 12 feet.

#### *3.6.6.2 Play Houses*

Play houses are allowed on the E-1 portion of the homeowner's lot provided that Design Committee approval is obtained to ensure that massing, color and size are consistent with Ranch recommendations and to ensure that they will not interfere with neighbor's views or privacy. Play houses built with foundations and tree houses are not permitted.

#### *3.6.6.3 Play Area Ground Cover*

Ground cover, comprised of natural materials in keeping with Ranch surface materials and colors, may be used under play equipment. The use of redwood bark is recommended. White beach sand does not meet the criteria of color compatibility and therefore is not allowed. If the play equipment is subsequently removed, the ground cover must also be removed, and the area returned to its natural condition. Any proposed ground cover to be used in dog runs or children's play areas must conform to requirements in Section 3.1.3.10, Section 3.1.3.11, Section 3.1.3.13, Exhibit 3.1.3.10, and Exhibit 3.1.3.11)

### 3.6.7 Permanently Installed Benches

Permanently installed wooden benches on homeowner's decks are allowed provided that they are consistent with the overall deck construction. If the lot plan allows for a retreat area, a bench is allowable in that area. Benches should be constructed of natural materials consistent with materials in the balance of the retreat area. Benches installed on the ground require Design Committee approval.

### 3.6.8 Drainage Systems

Drainage systems are allowed in circumstances where significant water runoff exists and the risk of erosion is high. Drainage systems should be constructed of large rocks, with an average diameter of 4 to 6 inches, finished to the existing grade. As an alternative, the homeowner should consider the use of web landscaping materials. Drainage systems should not interfere with natural drainage channels and should follow existing channels as much as possible. Exposed concrete lined drainage swales are not allowed. All modifications to existing drainage systems and creation of new drainage systems require Design Committee approval. The Design Committee will take into consideration the effect of the proposal on all other properties as well as on the property of the applicant. Applicants should be aware that the Town may require the applicant to obtain hydrological and soils engineering evaluations of the effects of the proposal. (See Exhibit 3.6.8.)

## 3.6.9 Mail Boxes

If a new or replacement mail box is required, contact the Ranch Office.

## 3.6.10 Signs

Signs can only be installed for a home or lot for sale indicating “For Sale”, “For Rent”, “For Exchange”, “Sale Pending”, or “Sold”. Only one sign is allowed per lot or home at any one time and must be located on the affected lot. Signs should be professionally painted or prepared. Signs should be no larger than 24”x24” (or 24”x26” with sign riders). No more than 2 additional riders in the same color scheme may be attached to the sign post at any one time and each may not be greater than 6”x24”. The sign may be free standing A-frame, metal frame or free-standing single or double yard arm post in style, as long as the top of the sign or stake is no more than 60” from street level. There may be no lighting installed on any sign. Signs may not be installed more than 7 days prior to listing on MLS and removed within 48 hours of close of escrow, with a maximum time of 90 days. A-frame signs for “Open House” are allowed only for broker tours or open houses and for no more than 1 hour prior and after; such signs may also be placed at the Ranch entrance and street intersections.

Signs indicating the presence of an alarm system for the home are also allowed. Only one sign is allowed per home or lot, and it should be located in the front entry area of the home within 5 feet of a structure. Generally, such signs should be of a reasonable dimension (*e.g.*, 12 inches wide and 12 inches tall) and a reasonable height (*e.g.*, the top of the sign should be no more than 24 inches from the ground).

## 3.6.11 Clotheslines

Clotheslines may be placed in the “backyard” (See Glossary) of a lot. However, residents are strongly encouraged to choose a location that is visible only by the owner, or within a fenced or screened area, if possible. Retractable clotheslines or the use of cords that can be removed when not in use (*i.e.*, no permanent structure) is also strongly encouraged. The use of drying racks on back decks that are generally less visible to the public and neighbors are similarly encouraged.

## 3.6.12 Weather Monitoring Equipment

Weather monitoring devices are considered additions to the exterior of a home and require Design Committee application and approval if they exceed 24 inches in height or width. Ornamental or decorative weathervanes are not permitted.

### 3.6.13 Approvals Required

Design Committee approval is required for all Auxiliary Structures included in this section, except mailboxes, signs, and weather equipment less than 24 inches. Town approvals may be required for some structures included in this section. Consult the Town Planning Department.

# *Exhibit 3.6.8—Example: Drainage A*

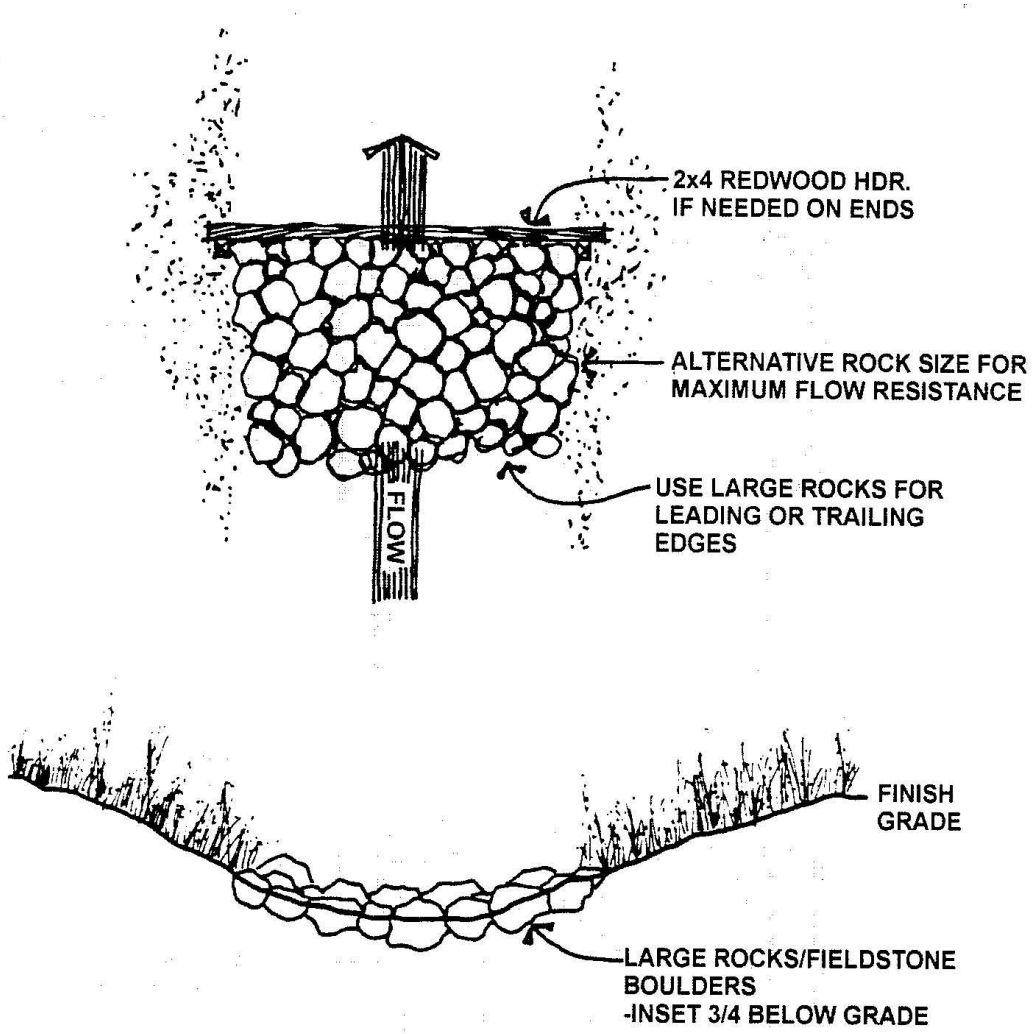

## *Exhibit 3.6.8—Example: Drainage B*

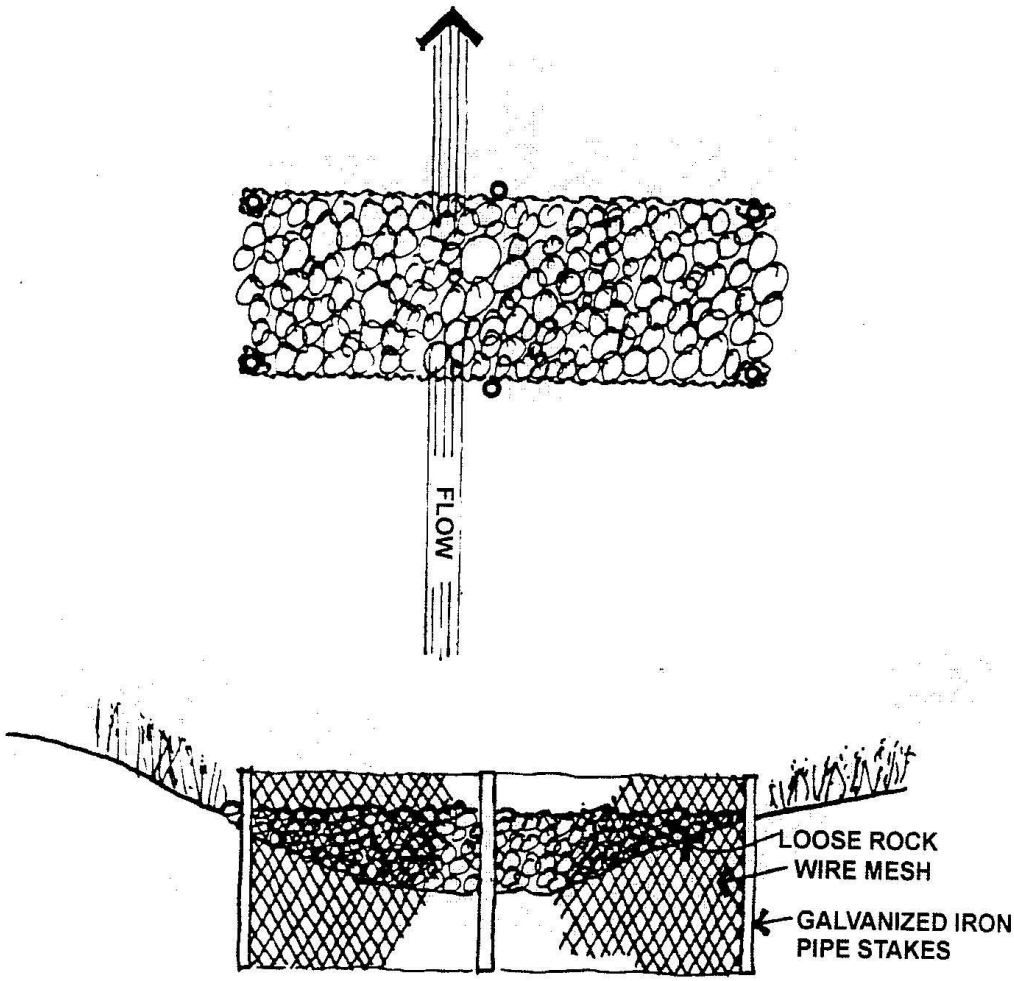

## *Exhibit 3.6.8—Example: Drainage C*

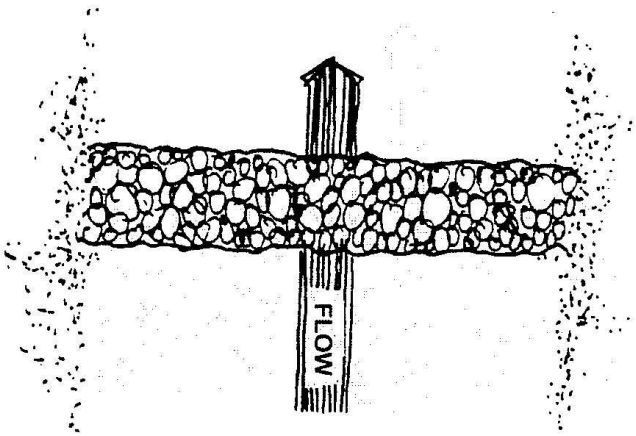


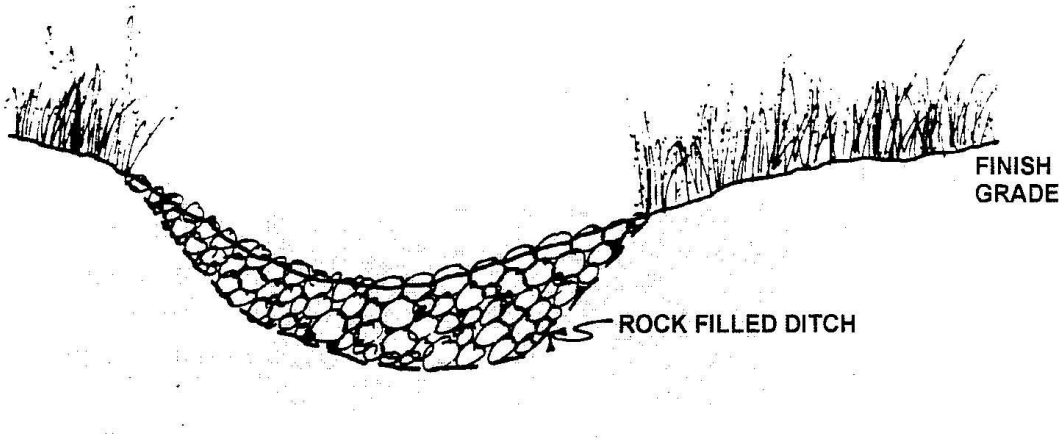

# 3.7—Fences, Privacy Screens and Retaining Walls

Please note that the Design Guidelines, including Exhibits, describe requirements and designs that may be superseded by updated Town, State, and Fire District building codes. As a result, residents and their contractors are responsible for ensuring compliance with all current building codes and requirements.

## 3.7.1 Concept Statement

The overriding design concept with respect to fences is to have the minimum amount of fencing. The desired environment is one of houses set in an open space area rather than houses with fenced yards. No fences shall be permitted that would enclose a lot or a portion thereof except to enclose a child's play area or a dog run. Privacy screens are permitted only for the purpose of protecting decks and patios from visibility from neighboring properties or from public areas. All equipment should be screened from view of neighbors and the public. Retaining walls should be minimized by reducing height and length to a minimum and by the use of plantings. Large expanses of retaining walls should incorporate different materials, techniques or textures to provide for architectural variety.

## 3.7.2 Design Guidelines

### *3.7.2.1 Fences—Dog Runs and Play Yards*

Fences are permitted only to enclose dog runs and children's play areas. Fenced areas may not be used for storage of any equipment, material or tools. No perimeter fences may enclose any substantial portion of the property such as the entire lot, the E-1 Area or the building envelope, or any portion of the above except for enclosures for dog runs and child play areas. Fences may only be constructed within the E-1 Area of any lot. Encroachment on E-2 Area is not allowed. The Town and Woodside Fire require fences or gates within 10’ of a structure to be constructed with non-combustible materials. Dog runs or children’s play areas may be constructed with metal posts with wire fencing in a dark color. (See Section 3.2.3 for allowable colors and finishes) Any new or replacement fence within 10’ of a structure must be composed of a non-combustible material for improved fire safety. Existing wood fences using non-Class A or Class A materials are grandfathered, however, as they require replacing, non-combustible materials must be used.

Play yard fences may not exceed 4 feet in height and dog run fences may not exceed 6 feet. Homeowners are encouraged to locate dog runs under decks where possible. Dog runs are limited to 180 square feet unless enclosing an under-deck area. These fences may only be installed as approved by the Design Committee and require a sketch with specifications (See Exhibit 3.7.2.1.)

Any proposed ground cover to be used in dog runs or children’s play areas must conform to requirements in Section 3.1.3.10, Section 3.1.3.11, Section 3.1.3.13, Exhibit 3.1.3.10, and Exhibit 3.1.3.11.

Residents are asked to notify the Ranch Office (Notification Application) for invisible fences which are also limited to the E-1 area of a lot.

### *3.7.2.2 Privacy Screens*

New or replacement privacy screens must be constructed of non-combustible materials and where possible landscaped to reduce visual impact. Residents are encouraged to replace any existing wood lattice or small dimension lumber privacy screens with non-combustible material. (See Section 3.2.3 for allowable colors and finishes.) The size of the privacy screen should be the minimum required to provide the necessary privacy. Louvered construction is a commonly accepted design (See Exhibit 3.7.2.2.) Other designs or materials may be approved on a case-by-case basis depending upon considerations of mass, visual impact and location with

respect to neighbors and public areas, however, designs should generally be angular or rectilinear in keeping with the overall Ranch architectural designs (See Section 3.4.1). Privacy screens generally will not be permitted to exceed 8 feet in height.

#### *3.7.2.3 Equipment Screens*

Equipment, such as air conditioners, heat pumps, hot tub heaters/filters, solar batteries, and auxiliary generators should be screened from view by neighbors and from public areas. Screening may involve landscaping (keeping in mind the fuel reduction requirements of a 5’ clearance) or structural elements that blend with neighboring structures.

#### *3.7.2.4 Retaining Walls*

The first consideration in designing a retaining wall should be to reduce the size of the retaining wall by re-grading the slope to be contained to reduce its height and length. However, such grading must take into consideration the effects on a neighboring property including possible subsidence and drainage problems. Movement of a significant amount of soil may require a site development permit from the Town. The second consideration should be to make the retaining wall as unobtrusive as possible through the use of plantings and through the use of a variety of architecturally interesting materials that integrate well with the surrounding landscape. Native stone may be used, provided it is dry stacked and no more than 30 inches in height (See Exhibit 3.7.2.4.)

#### *3.7.2.5 Lattice Work (For Landscape Plantings)*

Wood or other lattices to support landscape plantings attached to structures are a significant fire risk not only because of the small dimension lumber, but also the associated risk of landscape plantings in the 0–5’ zone around a structure. Such wood lattices are not allowed, and Woodside Fire requires that the 0-5’ zone around a structure be free of vegetation with the exception of groundcovers consisting of irrigated Approved Vegetation (defined by Ordinance) if they do not form a means of readily transmitting fire as determined by the fire code official. If within 10’ of a structure, non-combustible lattice work is required and appropriate pruning and maintenance can help minimize the risks.

### 3.7.3 Approvals Required

Design Committee approval is required for all elements covered by this section. All such structures must comply with Town Building Codes and may require building permits or site development permits. The homeowner should check with the Town to determine requirements.

# *Exhibit 3.7.2.1—Example: Dog Run*

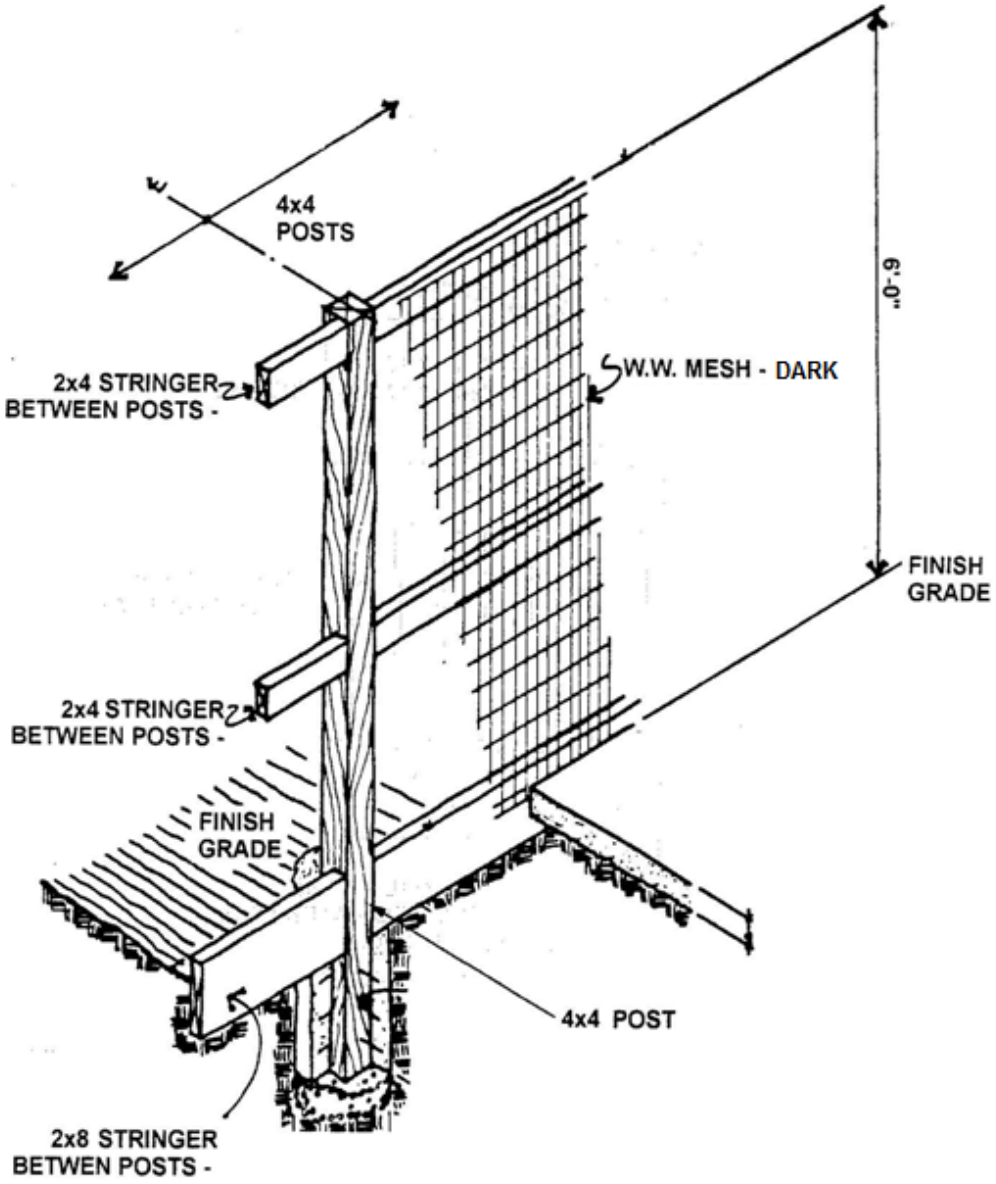


**NOTE: Non-combustible materials are required**

## *Exhibit 3.7.2.2—Example: Privacy Screen with Angled Slats*

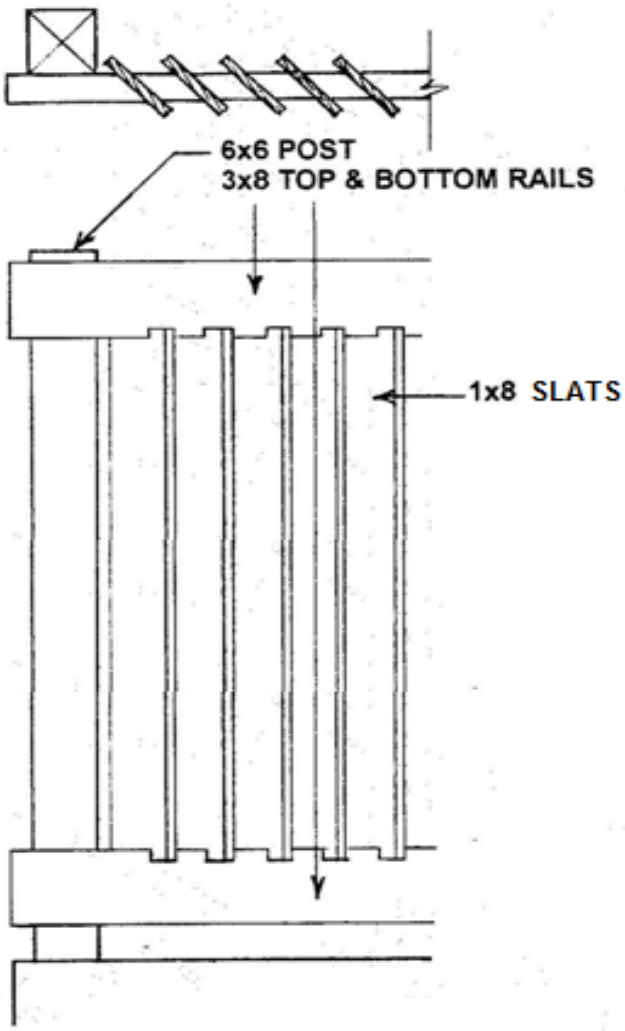


**NOTE: Non-combustible materials are required**

# *Exhibit 3.7.2.2—Example: Privacy Screen—Solid*

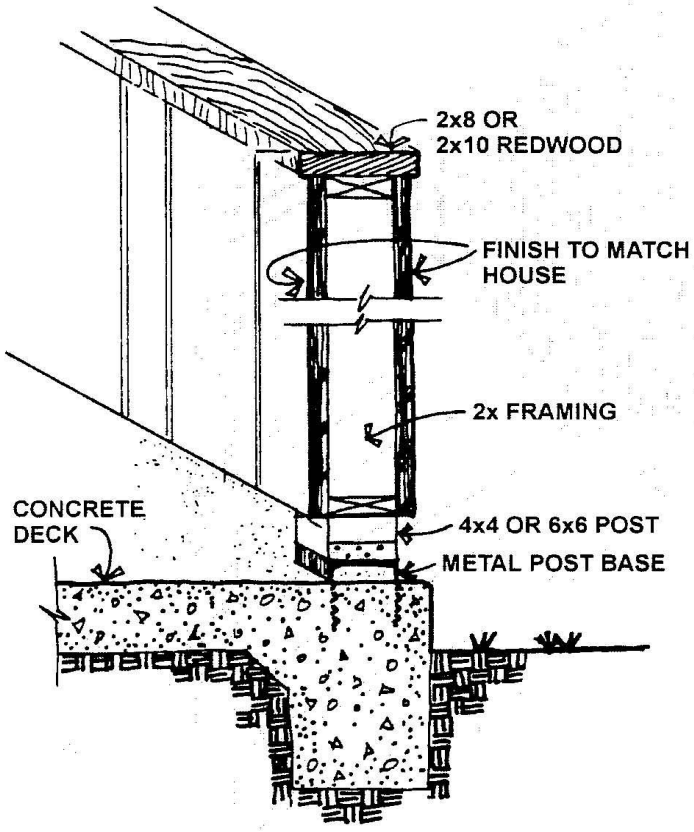

Example of sound and esthetic screening around generator. Non-combustible materials were used and painted to match home siding. Similar structure can be used for privacy screening when solid screening is suitable.

**NOTE: Non-combustible materials are required**

# *Exhibit 3.7.2.2—Example: Privacy Screen—Metal*

# *Exhibit 3.7.2.4—Example: Rubble/Brush Retaining Wall*

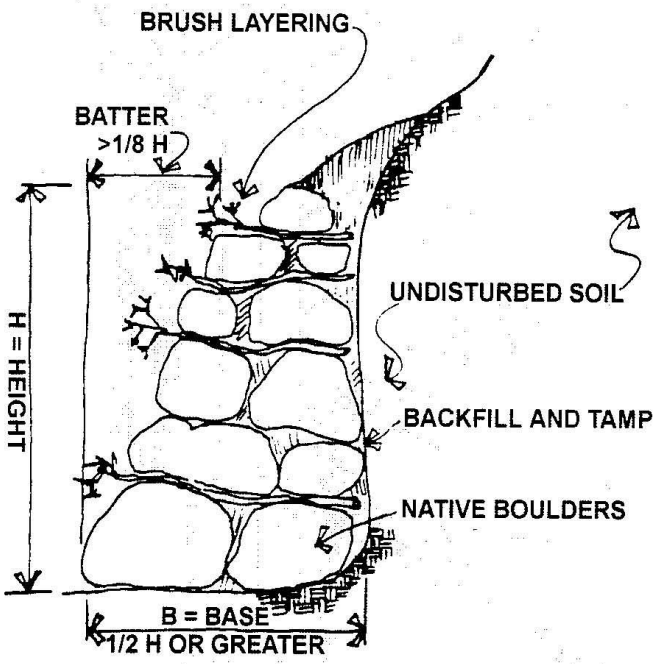

# 3.8—Carport: Conversion to Garage and Remodeling

## 3.8.1 General Design Concept

### *3.8.1.1 Carport Conversions*

Originally, open carports were widely used on the Ranch to create a feeling of openness and to reduce apparent mass on the narrow roads and tight cul-de-sacs. As landscaping has matured, this has reduced the apparent mass of some carports and garages and in some cases has altered the views through carports. The design concept has and will continue to include both carports and garages. Conversion of carports to garages must preserve the general architectural elements used on the Ranch, attempt to preserve View Corridors and Significant Views of distant hills and valleys, and must not negatively impact parking in the neighborhood.

All carports and garages must at all times have sufficient clear area to store two vehicles completely within the structure.

### *3.8.1.2 Carport Remodeling*

Carports are intended to be open and for the storage of vehicles. Other items may be stored in enclosures that must not obstruct views or limit vehicle storage capability. Side and rear carport openings may be enclosed with clear glass (see Section 3.2.3).

## 3.8.2 Architectural Design, Carport Conversions

### *3.8.2.1 General*

The enclosed structure must maintain the integrity of the architectural style of the house and use typical plans, design elements and materials used for the house. The design should attempt to make the conversion interesting rather than creating a plain box like structure. To mitigate a simple box appearance, the Design Committee may require the addition of one or more design elements: the use of double fascia board trim; a change of roof line to even or uneven gable; an extension of the roof over the doors to provide shadowing and reduce the feeling of boxiness; a deeper set back of the doors than the existing post structure; the use of glass; and attached or detached trellises (see Section 3.5 for trellises). Such design elements provide interest, and shadows and may help to integrate the garage to another structure or entry path. Garage doors may be made of the same material as the siding or another material such as metal, glass, wood, or other materials as they become available provided that the appearance and color blends well with the rest of the structure. (See Exhibit 3.8.2.1) (See Section 3.2.3 for allowable colors and finishes) (See Section 3.4.2.4 for more design details on overhead garage doors)

### *3.8.2.2 Views*

To preserve or replace a View Corridor through the enclosed structure, it may be required to add windows to the garage or overhead garage door. (See Section 3.8.2.3 Landscape, below.) Windows are generally only allowed to preserve View Corridors or to enclose existing side and rear openings. If windows allow visibility into the garage from neighbors or the street, homeowners must agree to minimize views of cluttered storage areas. Windows that are required to preserve a View Corridor must be clear. Homeowners are strongly encouraged to install multi-pane (instead of single pane) and tempered glass windows for improved fire safety.

#### *3.8.2.3 Landscape*

Addition or removal of landscaping may be a method of reducing the apparent mass or improving views. Addition of shrubs or trees may help soften the apparent mass of the proposed garage by hiding parts of the structure that would otherwise be exposed. Planting along the driveway and in front of the garage will further soften the impact of enclosure. However, the addition of landscaping may limit existing views and should include consideration of fuel reduction requirements requiring a 5-foot clearance around structures. Should a View Corridor exist through a carport, it may be possible to remove or trim tall shrubs or trees directly adjacent to the garage in order to re-establish the View Corridor lost by the enclosure of the carport. New landscape material would then be chosen that would maintain the openness of the newly established View Corridor. This approach, however, may have the unintended effect of increasing the apparent massing of the garage due to the removal of landscape material; so, a balance is required and will be a major consideration by the Design Committee.

#### *3.8.2.4 Doors*

If the front of the garage is less than seven feet from the street, the overhead garage doors must be segmented doors that roll on tracks (as contrasted to solid pivoting doors) in order to ensure no encroachment on easements or to minimize danger to pedestrians. The use of windows in overhead garage doors may be required or desirable to maintain a View Corridor. As newer designs become available, homeowners may choose to propose alternative designs for Design Committee review and approval. The Design Committee will consider such alternative designs based on site location as well as how well the proposal integrates with the overall Ranch aesthetic. All overhead garage doors must be equipped with automatic garage door openers. Person entry doors to garages must be metal or wood and painted to match the siding (See Section 3.2.3 and Section 3.4.2.4).

### 3.8.3 New Construction

For either new construction or replacement of an existing parking structure, the structure should be located to minimize the loss of views and set back from the road to reduce the feeling of mass and to provide off street parking.

### 3.8.4 Parking

Carports and garages are designed and intended to store vehicles. The Ranch has limited off street parking provided by APEs for visitor parking. The CC&Rs and Association rules require that occupant vehicles must be parked only in a garage/carport unless the household owns more than 2 vehicles that the garage was built to accommodate, or the garage/carport has been converted to an ADU or JADU. Whenever a carport is converted to a garage, the homeowner must agree to maintain the interior of the garage so that two cars can be parked inside. Carport or garage storage that reduces the number of vehicles that can be accommodated is not permitted if it requires parking outside the garage or carport.

### 3.8.5 Carport Remodeling

#### *3.8.5.1 Enclosing Side and Rear Openings*

Side and rear openings may be enclosed with glass with Design Committee approval.

#### *3.8.5.2 Carport Storage*

All storage, other than vehicles, must be behind closed doors. Storage enclosures within a carport must be equivalent to the architectural style of the carport using the same materials in the same design and proportion as the main structure. (See Section 3.6.3.)

### 3.8.6 Approvals Required

To convert a carport to a garage, a homeowner must receive approval from the Design Committee.

# *Exhibit 3.8.2.1—Garage Double Fascia*

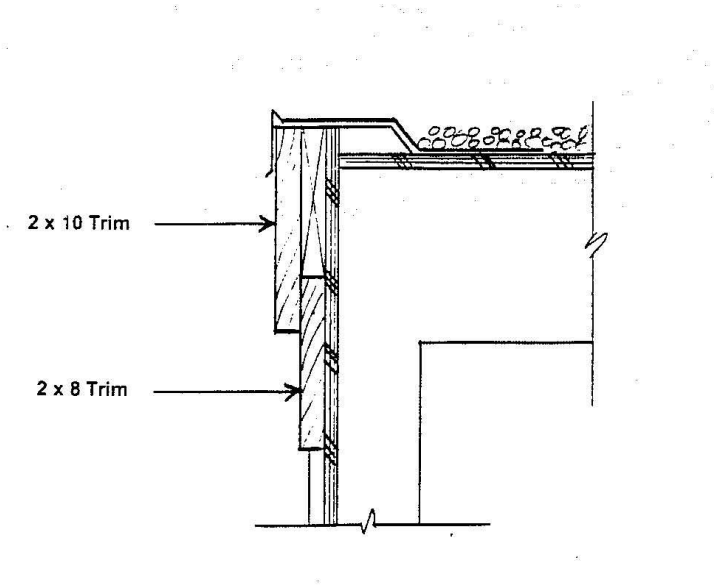

# *Exhibit 3.8.2.1—Garage Flat Roof Design*

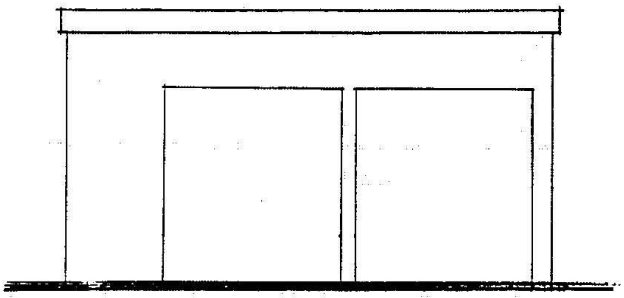

Front Elevation

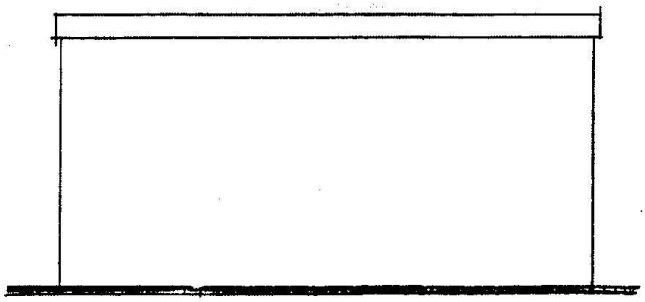

Side Elevation

# *Exhibit 3.8.2.1—Garage Even Gable Roof Design*

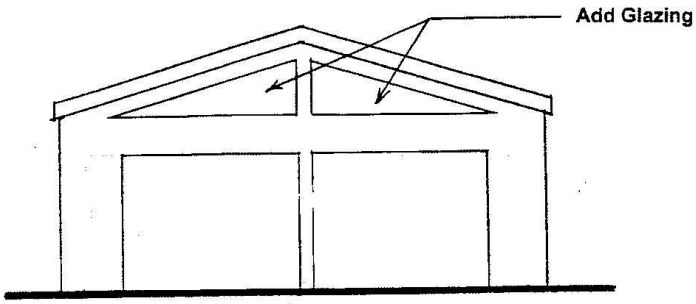


Front Elevation

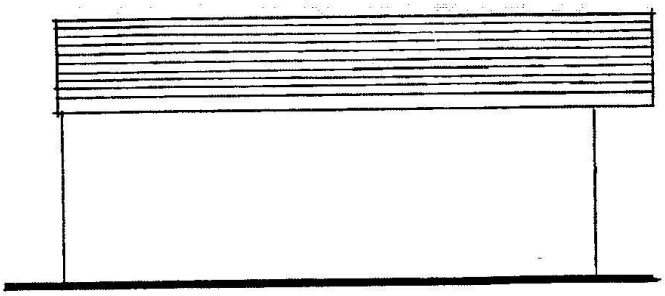

Side Elevation

# *Exhibit 3.8.2.1—Garage Elevation Uneven Gable Roof*

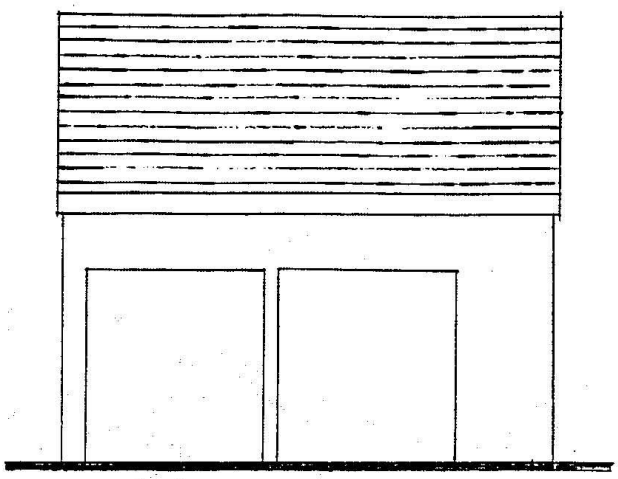

Front Elevation

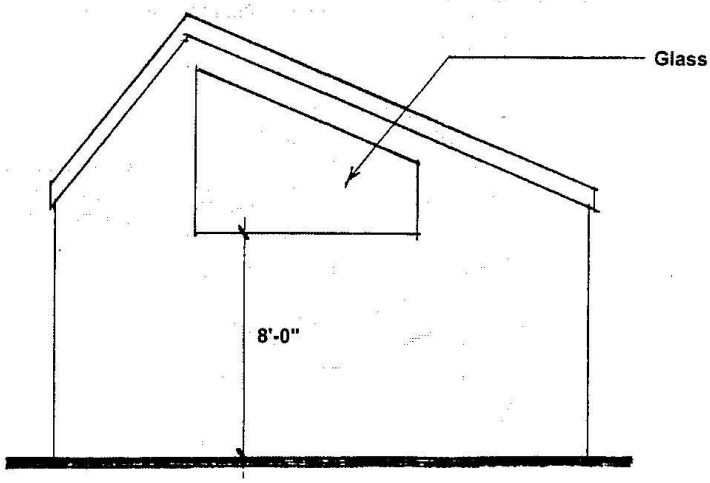


Side Elevation

# *Exhibit 3.8.2.1—Garage Fascia/Roof Extension Recessed Doors*

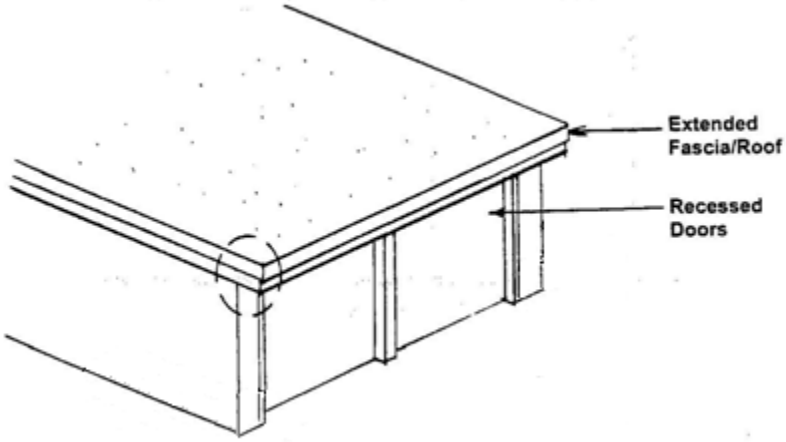


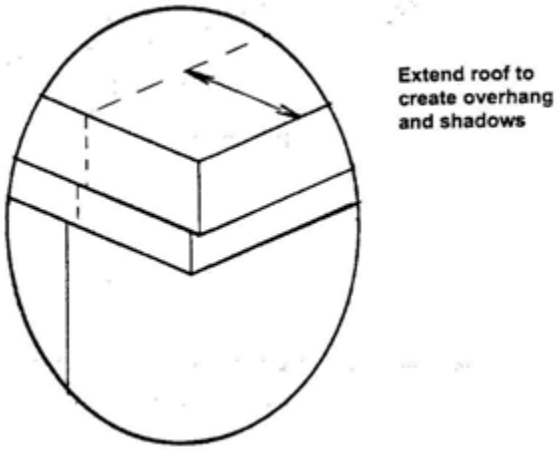

# *Exhibit 3.8.2.1—Garage Recessed Doors*

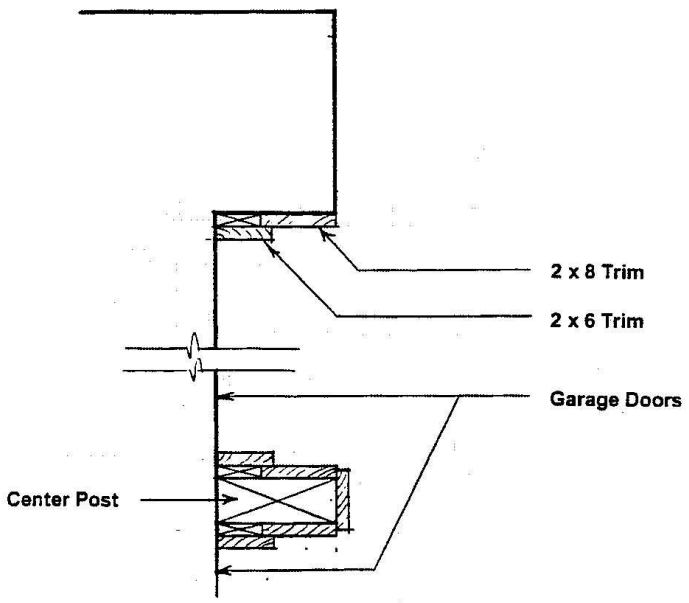

# *Exhibit 3.8.2.1—Examples: Garage Door Finish*

Door made of material other than matching building exterior

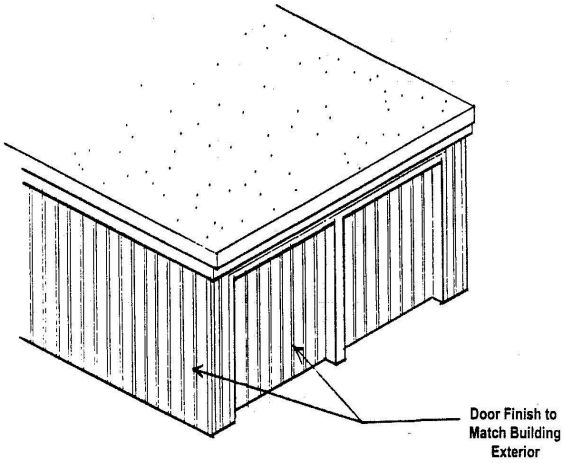


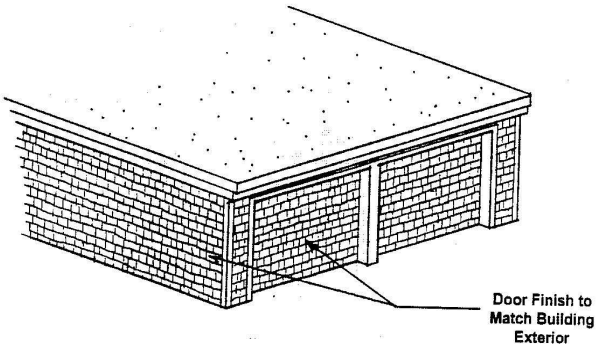


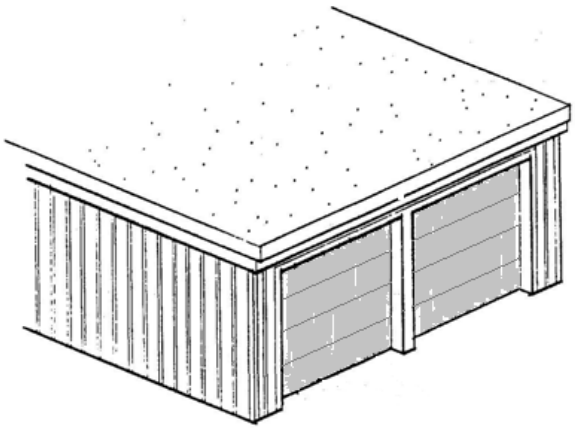

# 3.9—Exterior Lighting

## 3.9.1 Concept Statement

To maintain the rural character of Portola Valley Ranch, a minimalist approach should be implemented for exterior lighting. The primary objective of exterior lighting is safety and not decorative.

## 3.9.2 General Design Concept

Exterior lighting should provide adequate night lighting for safety along walkways from the street and/or carports/garages to entries, and on stairs, decks and patios. In Portola Valley Ranch as well as the Town of Portola Valley, all exterior lighting must be Dark-Sky compliant. Dark-Sky compliant means that the fixture emits only a down-light pattern and light spillage is shielded on all sides other than the bottom. Furthermore, for purposes of these Guidelines, Dark-Sky compliant means that the light source or diffusing lens is fully shielded so that the majority of the light emitted from the fixture hits the target and is shielded from normal viewing angles.

## 3.9.3 General Guidelines (applicable to all exterior lighting)

All new exterior lighting attached to the house, carport or decks that is installed as part of new construction or a remodel must conform to California Title 24 (see Exhibit 3.9.3) as well as any other applicable Town or State codes.

**Uses**

- The only allowed uses of exterior lighting are:
  - For walkways from the street and/or carports/garages to entries
  - On stairs, decks and patios
  - To illuminate house number for emergency services and arriving guests (See Section 3.9.7 for special requirements and exemptions from other provisions in this section)
- Landscape and other lighting for ornamental purposes, including lights installed on trellises (e.g., string lights), are not permitted (except as described in Section 3.9.6). It should also be noted that the Town prohibits “Festoon, café, or any other string of exposed bulbs.” [Town Code 18.36.040 8(vii)(h)]
- Lights are generally restricted to E-1 areas, but if required for safety or special circumstances, may extend into E-2 areas (*e.g.*, approaching primary entrance from the street).
- Permanently installed trellis lights are not allowed.

**Fixtures**

- All fixtures must be Dark-Sky compliant (see Section 3.9.2 for definition).
- In order to reduce energy consumption, it is recommended that high-efficacy lighting be used. In addition, in order to reduce fire risk, it is recommended that low heat producing sources, such as LEDs, be considered.
- The original Victor lights are considered “grandfathered”. Such grandfathered fixtures or systems may be repaired as required. Installation of additional "grandfathered" fixtures is not allowed unless Design Committee approval is obtained for exceptional circumstances.

- Non-wood fixtures must blend unobtrusively into the surrounding background. Inconspicuous colors such as black, dark brown, anodized bronze or untreated copper left to weather may be used. White, bright, and reflective colors are not permitted.
- Security-type light fixtures with exposed flood lights (*i.e.*, not Dark-Sky compliant) or with built-in swivel-type directional adjustment are not permitted.
- Because homes on the Ranch are located at multiple elevations, residents should attempt to consider selection and placement of fixtures so that homeowners at a lower grade level are minimally impacted by potential visibility of the light source or diffusing lens.
- Placement of lights on stairs, walkways, or patios/decks should consider locations that face away from neighboring properties to minimize visibility and light spillage.
- Fixtures within each of the 4 categories listed below (overhead, low-height, in-ground, and stair-step) must match. For example, overhead lights placed on both the house and the carport/garage should all be matching fixtures. A unique fixture at the front entry door is an allowable exception.

**Lighting Controls**

- Lighting should be controlled, selected, and adjusted so that lights are on only when needed.
- Lighting fixtures for safe approach to the home entrance or approach to and from (attached or unattached) carports/garages should be controlled with motion sensors and/or timers in conformance with Town lighting requirements.
- When activated by a motion sensor, lights should remain on for no more than 10 minutes. Motion sensors must be set to trigger only by motion in an E-1 area or on an approach to an E-1 area and must not be triggered by movement on streets or public walkways. Motion sensors must not allow triggering during daylight hours.
- In consideration of neighbors, except for illuminated address numbers (see Address Lighting, Section 3.9.7), all exterior lighting should generally be turned off by no later than 11:00 PM. Turning lights off earlier is encouraged as is the use of automatic timers.
- Dark sky compliant solar lights must have the ability to be turned off by 11:00 PM.

## 3.9.4 Color and Maximum Light Output

The color of the light source must be in the range of 2700-3500 Kelvins for all fixtures to minimize glare, cool white light and disruption to the natural 24-hour biological cycle. Homeowners should attempt to maintain consistency of light source and color in all common fixtures.

The following definitions apply to these Design Guidelines:

**Overhead Exterior Lighting**—Any fixtures attached at a height of 6 to 8 feet to the exterior of the home, carport or garage, or to an overhead entry trellis or overhang. Recessed fixtures at the primary entrance to the home are permitted and included as Overhead Exterior Lighting as long as they meet all requirements (including Dark-Sky) in these Guidelines. Homeowners should be aware of the potential for reflected light off of the wall on which the fixture is attached or reflected off the ground material (especially stone) may cause the light to appear brighter; in such circumstances, lower lumen output may be appropriate.

**Low-height Exterior Lighting**—Any fixtures attached at a height of less than 6 feet to deck/stair railings or the exterior of the home, trellis, carport or garage.

**In-ground Exterior Lighting**—Any fixtures that are attached to a post, spike or like structure that are installed in the ground. These fixtures should generally not exceed a height of 24 inches above the surface to be

lighted. In selection of a fixture, homeowners may wish to consider ensuring that the spread of light is directed primarily at the walkway rather than surrounding landscaping.

**Exterior Stair-Step Lighting**—Any fixtures that are attached to or flush with the vertical face or the underside edge of a stair step. This lighting, typically LED, is permitted provided the light is directed downward and the light source is not directly visible.

**Maximum Lumen Output by Fixture Type**

| Fixture Type | Maximum Lumen Output for a Single Fixture* | Maximum Lumen Output for Multiple Fixtures** | Typical Installation |
|---|---|---|---|
| Overhead | 350 | 25 per linear foot of walkway | Generally installed at entries to carports or residence |
| Overhead (for external illumination of address number) | 150 | 150 | Installed above address number and intended to stay illuminated dusk to dawn. |
| Low-Height | 225 | 40 per linear foot of walkway or deck/patio perimeter | Generally installed at approximately every 4–8 feet |
| In-ground | 150 | 30 per linear foot of walkway | Generally installed at approximately every 4–8 feet |
| Stair-Step | 50 *** | 50 per 4-foot width of step | Generally installed on the riser or underside of every stair step (see ***) |

* The use of dimmers and dimmable fixtures is encouraged to reduce lighting output when possible, while maintaining levels sufficient for safety.

** The Design Committee may approve additional lighting at points where a walkway or steps make a change in direction.

*** The lowest possible lumen output should be used, especially in cases where multiple steps could result in the appearance of a string of lights. In such cases, post or railing lights are preferred.

## 3.9.5 Interior Carport Lighting

Carports may be lighted to provide safe access to automobiles and storage areas as well as to provide task lighting as necessary. However, the light source and diffusing lens must not be visible to a person standing on the sidewalk or street near the carport entrance.

- For purposes of safe access, interior carport lighting should provide the minimum lumens required and should not exceed 350 lumens per fixture. If more than one fixture is used, total lumens (for all

fixtures) should not exceed 700 lumens. If this lighting is on a motion sensor, it should not be activated by motion on the street or driveway. These lights should not be on for longer than 10 minutes unless the carport is occupied.

- For purposes of task lighting, the minimum lumens required should be used and this lighting must be turned off when not in use.

### 3.9.6 Seasonal Holiday Decorative Lighting

Seasonal holiday decorative lights are allowed, but they must be removed within one month of installation. Laser lights should be placed to ensure that lights do not impact neighbors.

### 3.9.7 Address Lighting (On from Dusk to Dawn)

To help quickly locate homes in an emergency, local fire ordinances require illuminated address numbers for all new construction. They are also recommended for existing homes.

Address numbers may be illuminated "externally" or "internally." This lighting should be OFF during daylight hours and ON from dusk until dawn and is the only exception to the requirement that exterior lighting be off after 11 PM. In consideration of neighbors, the level of illumination should be only what is minimally necessary for visibility from the street. As with other lighting, the light source color should be 2700 - 3500 Kelvins.

External illumination can be done using a dark sky fixture mounted or affixed over the numbers; in this case such a fixture is limited to a maximum of 150 lumens. It should be noted that with this approach, thick numbers may be self-shadowing, reducing their legibility.

Internally illuminated address numbers come in several configurations (other configurations may be acceptable) (see Exhibit 3.9.7).

- Edge-lit numbers utilize LEDs and an underlying translucent acrylic or plastic layer matching the shape of each number to illuminate their outside edges. These numbers should be flush mounted or nearly flush mounted to limit unnecessary light spillage.
- Lighted numbers in a dark background frame should be no brighter than necessary for visibility from the street. Illumination should not spill outside of the background frame. These units typically use low-voltage LEDs and, if necessary, can be attenuated by utilizing a lower voltage power source.
- Dark numbers in a lighted background frame are not allowed.

Other internally illuminated configurations may be acceptable as long as overall light output does not exceed 100 lumens.

In all cases numbers should be of colors that contrast with their background to enhance visibility. A backing plate may be used to help achieve this contrast. Numbers shall be no larger than 6" high with a minimum stroke width of ½ inch and shall be mounted on an existing structure, positioned to be clearly visible from the street. If needed to meet fire code requirements, exceptions to these size or placement criteria may be made if there is not a suitable location within 50 feet of the street.

Solar powered illumination is discouraged, as most units fail to store sufficient energy during winter daylight to power the lights from dusk until dawn.

Lots are limited to one illuminated house number per dwelling.

See Section 3.2.3 for allowable colors and finishes.

The installation of internally illuminated house numbers does not require a design application but must comply with the requirements outlined in this Section and Section 3.2.3.

Any wall fixture installed for external illumination of address number requires a Design Application.

### 3.9.8 Approvals Required

Design Committee approval is required for the installation of any type of exterior lighting fixture (with the exception of an internally illuminated address number). The application must include:

- Plot plan showing location and number of all fixtures
- Product specification sheet, including lumen output
- Specification of fixture color
- Stake out of fixture locations on site for review by Design Committee members

# *Exhibit 3.9.3—California Energy Commission; 2013 Building Energy Efficiency Standards (Title 24, Part 6 and Associated Administrative Regulations in Part 1)*

This code is constantly being updated and is subject to change for new or remodel construction; therefore, residents should check for the current version. As of this edition of the Design Guidelines, the relevant portion of this code is Subchapter 7 (Low Rise Residential Building) Section 150.0 (k)(9) that refers to Mandatory Features and Devices for Residential Outdoor Lighting as shown below:

9. **Residential Outdoor Lighting.** Luminaires providing residential outdoor lighting shall meet the following requirements, as applicable:
    A. For single-family residential buildings, outdoor lighting permanently mounted to a residential building or other buildings on the same lot shall be high efficiency, or may be low efficiency if it meets all of the following requirements.
        i. Controlled by a manual ON and OFF switch that does not override to ON the automatic actions of items ii or iii below; and
        ii. Controlled by a motion sensor not having an override or bypass switch that disables the motion sensor, or controlled by a motion sensor having a temporary override switch which temporarily bypasses the motion sensing function and automatically reactivates the motion sensor within 6 hours
        iii. Controlled by one of the following methods:
            a. Photocontrol not having an override or bypass switch that disables the photocontrol; or
            b. Astronomical time clock not having an override or bypass switch that disables the astronomical time clock and which is programmed to automatically turn the outdoor lighting OFF during daylight hours; or
            c. Energy management control system which meets all of the following requirements:

            At a minimum provides the functionality of an astronomical time clock in accordance with Section 110.9; meets the Installation Certification requirements in Section 130.4; meets the requirements for an EMCS in Section 130.5; does not have an override or bypass switch that allows the luminaire to be always ON; and, is programmed to automatically turn the outdoor lighting OFF during daylight hours.

# *Exhibit 3.9.3—Example of Wall Mounted Fixture*

**PLEASE NOTE THAT THESE EXAMPLES ARE FOR REFERENCE ONLY. MANUFACTURERS MODIFY FIXTURES FREQUENTLY. THEREFORE, A CURRENT SPECIFICATION SHEET IS REQUIRED TO VERIFY DELIVERED LUMEN OUTPUT FOR ALL APPLICATIONS**

## 3000 K LED Outdoor Lantern AZT

11250AZT30 (Textured Architectural Bronze)

Project Name: _____
Location: _____
Type: _____
Qty: _____
Comments: _____

### Dimensions

| | |
|---|---|
| Height | 7.00" |
| Width | 5.00" |

### Ordering Information

| | |
|---|---|
| Product ID | 11250AZT30 |
| Finish | Textured Architectural Bronze |
| Available Finishes | AZT, BKT |

### Dimensions

| | |
|---|---|
| Extension | 6.50" |
| Height from center of Wall opening | 3.25" |
| Base Backplate | 5.00 X 5.00 |
| Weight | 2.60 LBS |

### Photometrics

| | |
|---|---|
| Kelvin Temperature | 3000 K |
| Color Rendering Index | 90 |

### Specifications

| | |
|---|---|
| Material | Aluminum |

### Electrical

| | |
|---|---|
| Voltage | 120-277 V |
| Input Voltage | Dual (120/140) |

### Qualifications

| | |
|---|---|
| Safety Rated | Wet |
| Title 24 | Yes |
| Class 2 | Yes |
| Dark Sky | Yes |
| Expected Life Span | 40000 Hours |
| Warranty | www.kichler.com/warranty |

### Primary Lamping

| | |
|---|---|
| Light Source | LED |
| Lamp Included | Integrated |
| # of Bulbs/LED Modules | 1 |
| Delivered Lumens | 350 |
| Delivered Efficacy | 33 |
| Max or Nominal Watt | 11W |

Kichler
7711 East Pleasant Valley Road
Cleveland, Ohio 44131-8010
Toll free: 866.558.5706 or kichler.com

Notes:
1) Information provided is subject to change without notice. All values are design or typical values when measured under laboratory conditions.
2) Incandescent Equivalent: The incandescent equivalent as presented is an approximate number and is for reference only.

KICHLER

# *Exhibit 3.9.3—Example of Wall Mounted Fixture*

HINKLEY & FR

HINKLEY LIGHTING, INC.
33000 PIN OAK PARKWAY | AVON LAKE, OHIO 44012
[PH] 440.653.5500 [F] 440.653.5555
HINKLEYLIGHTING.COM | FREDRICKRAMOND.COM

| LUNA 1660BZ-LED | |
|---|---|
| BRONZE | |

| | |
|---|---|
| WIDTH: | 6.0" |
| HEIGHT: | 16.0" |
| WEIGHT: | 5.0 LBS |
| MATERIAL: | ALUMINUM |
| GLASS: | ETCHED GLASS LENS |
| BACKPLATE WIDTH: | 6.0" |
| BACKPLATE HEIGHT: | 16.0" |
| SOCKET: | 2-5.50W COL-35 *INCLUDED |
| DARK SKY: | YES |
| **LED INFO:** | |
| LUMENS: | 250 |
| COLOR TEMP: | 2700k |
| CRI: | 90 |
| LED WATTAGE: | 6w |
| INCANDESCENT EQUIVALENCY: | 35w |
| DIMMABLE: | Yes, on any Incandescent, MLV, ELV, or C-L dimmer. |
| NOTES: | PATENT: US AND FOREIGN PATENTS PENDING \| |
| EXTENSION: | 3.5" |
| TTO: | 10.0" |
| CERTIFICATION: | C-US WET RATED |
| VOLTAGE: | 120V |
| UPC: | 640665166071 |

AT HINKLEY, WE EMBRACE THE DESIGN PHILOSOPHY THAT YOU CAN MERGE TOGETHER THE LIGHTING, FURNITURE, ART, COLORS AND ACCESSORIES YOU LOVE INTO A BEAUTIFUL ENVIRONMENT THAT DEFINES YOUR OWN PERSONAL STYLE. WE HOPE YOU WILL BE INSPIRED BY OUR COMMITMENT TO KEEP YOUR 'LIFE AGLOW.'

*life* AGLOW®

# *Exhibit 3.9.3—Example of Pathway Fixture*

## Path & Spread

12V Integrated LED

| | Shallow Shade Small | | Shallow Shade Large | |
|---|---|---|---|---|
| Finishes | **BKT** | | **BKT** | |
| Color Temperature | 2700K - Warm White | 3000K - Pure White | 2700K - Warm White | 3000K - Pure White |
| Item Number and Finish | **15805** BKT27R | **15805** BKT30R | **15806** BKT27R | **15806** BKT30R |
| Housing | Cast Aluminum with cast bottom driver compartment | | Cast Aluminum with cast bottom driver compartment | |
| Power Usage at 12V AC Input, VA and Watts | 4W, 5.8VA | | 4W, 5.8VA | |
| CRI | 80+ | | 80+ | |
| Voltage Range | 9V-15V AC/DC with no loss in light output | | 9V-15V AC/DC with no loss in light output | |
| Light Source | 3 integrated high output LEDs, 3 step binning for color consistency. Tested to a Lumen Maintenance L70 of 40,000 hrs. | | 3 integrated high output LEDs, 3 step binning for color consistency. Tested to a Lumen Maintenance L70 of 40,000 hrs. | |
| Delivered Lumens & Efficacy | 2700K – 126 lm<br>2700K – 31 lm/W | 3000K – 140 lm<br>3000K – 35 lm/W | 2700K – 126 lm<br>2700K – 31 lm/W | 3000K – 140 lm<br>3000K – 35 lm/W |
| Wiring | 30" of usable #18-2, SPT-1W leads. Cable connectors supplied. | | 30" of usable #18-2, SPT-1W leads. Cable connectors supplied. | |
| Notes | Includes 8" slotted in-ground stake and has a square stem. | | Includes 8" slotted in-ground stake and has a square stem. | |
| Accessories | **15601** Surface Mounting Flange<br>**15607** Surface Mounting Bracket | | | |
| Dimensions | 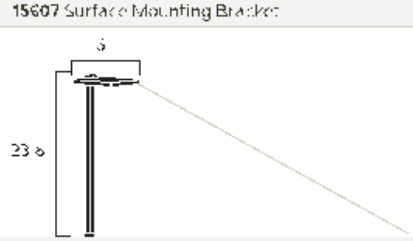 | | 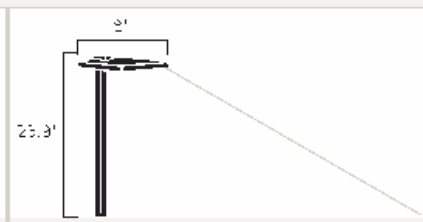 | |
| Photometrics | | | | |
| Distance from Light | 0' 1 2 3' 4 5' 6 7' 8' | | 0' 1' 2' 3 4' 5' 6' 7 8' | |
| Foot-candles (FC) | 21.2 2 0.3 1.56 .55 .33 .1 .06 - | | 20.7 1.1 4.8 1.56 .55 .33 .1 .06 - | |

# *Exhibit 3.9.3—Example of Deck Fixture*

12V Integrated LED Deck & Patio

| | Mini Deck Light | | | Half Moon | | |
|---|---|---|---|---|---|---|
| Finishes | **BBR** (shown), AZT, BKT, WHT | | Additional Finishes | **BBR** (shown), AZT, WHT | | Additional Finishes |
| Color Temperature | 2700K – Warm White | 3000K – Pure White | AZT BKT WHT | 2700K – Warm White | 3000K – Pure White | 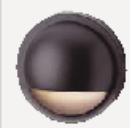 AZT WHT |
| Item Number and Finish | 15765 AZT27R<br>15765 BBR27R<br>15765 BKT27R<br>15765 WHT27R | 15765 AZT30R<br>15765 BBR30R<br>15765 BKT30R<br>15765 WHT30R | | 15764 AZT27R<br>15764 BBR27R<br>15764 WHT27R | 15764 AZT30R<br>15764 BBR30R<br>15764 WHT30R | |
| Housing | Cast Aluminum or Cast Brass (BBR) | | | Cast Aluminum or Cast Brass (BBR) with satin-etched lens | | |
| Power Usage at 12V AC Input, VA and Watts | .86W, 1.86VA | | | .86W, 1.86VA | | |
| CRI | 80+ | 80+ | | 80+ | 80+ | |
| Voltage Range | 9V-15V AC/DC with no loss in light output | | Coordinating Products | 9V-15V AC/DC with no loss in light output | | |
| Light Source | 1 integrated high-output LED with 3 step binning for color consistency. Tested to a Lumen Maintenance L70 of 40,000 hrs. | | LED Path Lights **15815**, **15827** & **15826**. see pages 49-50 | 1 integrated high-output LED with 3 step binning for color consistency. Tested to a Lumen Maintenance L70 of 40,000 hrs. | | |
| Delivered Lumens & Efficacy | 2700K = 41 lm<br>2700K = 50 lm/W | 3000K = 43 lm<br>3000K = 51 lm/W | | 2700K = 41 lm<br>2700K = 50 lm/W | 3000K = 43 lm<br>3000K = 51 lm/W | |
| Wiring | 72" of usable #18-2, SPT-1W leads. Cable connectors supplied. | | | 72" of usable #18-2, SPT-1W leads. Cable connectors supplied. | | |
| Notes | Includes stainless steel mounting bracket and hardware. White finish has coordinating white color leads. Brass will naturally patina over time. | | | Includes stainless steel mounting bracket and hardware. White finish has coordinating white color leads. Brass will naturally patina over time. | | |
| Dimensions | | | | | | |
| Photometrics | | | | | | |
| Mounting Height | 0' | .5' | 1' | 2' | 3' | 4' | 5' |
| 6" | 76.5 | 20 | 8 | .2 | .06 | .05 | .03 |
| 12" | 13 | 10.63 | 4.8 | 1.1 | .20 | .08 | .05 |
| 30" | 3.2 | 3.4 | 2.6 | 1.2 | .52 | .24 | .12 |

| Mounting Height | 0' | .5' | 1' | 2' | 3' | 4' | 5' |
|---|---|---|---|---|---|---|---|
| 6" | 28.7 | 14.8 | 1.4 | .07 | .05 | .01 | .00 |
| 12" | 8.3 | 6.4 | 2.6 | .45 | .08 | .02 | .01 |
| 30" | 2.1 | 2.05 | 1.55 | .5 | .3 | .11 | .03 |

# *Exhibit 3.9.3—Example of Step Fixture*

## LED Step Light Vertical Louver AZ

12606AZ (Architectural Bronze)

Project Name: _____
Location: _____
Type: _____
Qty: _____
Comments: _____

### Dimensions

| | |
|---|---|
| Height | 2.75" |
| Length | 4.50" |
| Width | 1.50" |

### Ordering Information

| | |
|---|---|
| Product ID | 12606AZ |
| Finish | Architectural Bronze |
| Available Finishes | AZ, WH |

### Photometrics

| | |
|---|---|
| Kelvin Temperature | 3000K |
| Color Rendering Index | 82 |

### Specifications

| | |
|---|---|
| Material | Steel / Aluminum |

### Electrical

| | |
|---|---|
| Voltage | 120V |
| Input Voltage | Single(120) |
| Operating Voltage Range | 108-132 |

### Qualifications

| | |
|---|---|
| Safety Rated | Damp |
| Class 2 | Yes |
| Expected Life Span | 40000 Hours |
| Warranty | www.kichler.com/warranty |

### Installation

| | |
|---|---|
| Direct Wire | Yes |

### Primary Lamping

| | |
|---|---|
| Light Source | LED |
| Lamp Included | Integrated |
| Delivered Lumens | 30 |

Kichler
7711 East Pleasant Valley Road
Cleveland, Ohio 44131-5010
Toll free: 866.558.5706 or kichler.com

Notes:
1) Information provided is subject to change without notice. All values are design or typical values when measured under laboratory conditions.
2) Incandescent Equivalent: The incandescent equivalent as presented is an approximate number and is for reference only.

KICHLER

## *Exhibit 3.9.7—Examples of Internally Illuminated Address Lighting*

Edge-lit

Lighted Numbers in Dark Background Frame

Dark Numbers in a Lighted Background Frame (Not Allowed)

# 3.10—Antennae (Including Satellite Dishes)

## 3.10.1 Concept Statement

The basic Ranch concept is to establish and maintain a development where the houses blend into the natural environment. Since antennae are not consistent with the concept, locations for installing antennae and dishes must be selected to minimize the visual impact.

## 3.10.2 General Design Concept

### *3.10.2.1 Original Concept*

The original Design Guidelines discouraged the installation of any kind of antenna unless the homeowner was unable to receive an adequate TV signal. In that case, there were three very small approved antennae. With the introduction of cable, it was hoped that antennae would be removed and the Ranch would return to a more natural state.

### *3.10.2.2 FCC Rules*

On October 4, 1996 a new FCC rule went into effect that preempts a homeowner association from precluding the installation of certain types of over-the-air reception devices used to receive video programming signals from broadcast satellites, broadband radio service, and television broadcast stations. This rule was further amended and became effective on May 25, 2001, which extended this rule to apply to customer-end antennae that receive and transmit fixed wireless signals. This rule does not free the homeowner from Design Committee procedures but does guarantee that antennae and satellite dishes may be installed with Design Committee approval.

### *3.10.2.3 Visibility Standards*

Devices must be as inconspicuous as possible while still providing a functional signal. Devices covered by the rule may be mounted on “masts” to reach the height needed to receive or transmit an acceptable signal, however, masts higher than 12 feet above the roofline may be subject to local permitting requirements. The Design Committee will approve equipment and locations that will satisfy these criteria. Painting of the antennae or dishes may be required if it does not reduce the signal below an acceptable level. Screening of the installation may also be required.

## 3.10.3 Permitted Antennae

Devices designed to receive direct broadcast satellite service, video programming via broadband radio service (wireless cable), or fixed wireless signals via satellite or other means are permitted if they are one meter or less in diameter or diagonal measurement. Antenna designed to receive local television broadcast signals are also allowed. Antennae designed to receive other types of signals are not permitted.

## 3.10.4 Approvals Required

Design Committee approval is required for the installation of any type of antennae. An application must be submitted that includes the antennae description and specifications as well as alternative locations. The homeowner is advised to have the installation contractor obtain signal level readings from various locations on the property so that a choice can be made of the least conspicuous location. The Design Committee may require that an independent consultant measure multiple locations for adequate signal level at the applicant's

expense. Town approval may be required in certain circumstances. Consult with the Town Planning Department.

# 3.11—Photovoltaic and Solar Panels; Rechargeable Solar Home Batteries

## 3.11.1 Design Committee Approval Considerations

Design Committee approval is required prior to installation.

The Design Committee's primary consideration in reviewing a proposed installation of photovoltaic and solar panels, including potential mitigating measures, shall be the visual aesthetics and its impact as viewed both on-site and off-site by immediate surrounding neighbors and any other neighbors who have visual site lines to the proposed project. Selection of products and their integration into building and rooflines should be done to ensure that these products do not call attention to themselves. The same attention to visual impact applies to all associated equipment.

Applicants should keep in mind the rapid evolution in technology whereby each new generation of changes provides for greater efficiency and thus reduced scope of the system. Nevertheless, efficiency of the installation shall not be the sole determining factor in obtaining Design Committee approval.

## 3.11.2 No Prohibited Installations

California State Code (Civil Code Section 714) CC&Rs and Solar Energy Systems and (California Public Resources Code Section 25980-25986) Solar Shade Control Act of 1979 specifically state that installation of photovoltaic and solar panel systems cannot be prohibited (See Exhibit 3.11.2). However, the law does allow for reasonable restrictions for the benefit of the community that are consistent with CC&Rs and Design Guidelines.

Some proposed locations and/or designs for the installation of photovoltaic and solar panels may not be appropriate regardless of the proposed mitigations to reduce on-site and off-site impacts. The Design Committee may make such a determination after reviewing all elements of the proposed project and deem the application to be in conflict with Design Guidelines.

The Committee may require that the applicant consider alternative locations, alternative designs, or other mitigations to minimize visual impacts. If an applicant concludes that only the original proposal meets system needs, then the applicant shall provide sufficient data to support that conclusion, including a demonstration that all alternatives would diminish the efficiency below levels that are necessary for an appropriate system as provided for in state guidelines.

## 3.11.3 Design Committee Application

The application to the Design Committee must include:

1. Drawings showing the location of the proposed photovoltaic system (including solar panels and associated equipment or electrical components) and/or rechargeable home battery and associated equipment.
2. Detailed dimensions on the drawings should include (but not be limited to):
    a. Height of the roof racking system (distance from the building surface)
    b. Height of the vertical stanchions
    c. Maximum and minimum height of the solar panels once attached to the racking system
    d. Setbacks (both from building envelope line as well as edge of roof)
    e. All other dimensions necessary to obtain permit approval

3. Product specifications for the solar panels, inverter, and home battery if applicable.

See Exhibit 3.11.3 for a generalized description of a photovoltaic system and its components.

## 3.11.4 Overall Design of Photovoltaic System

The roof racking system used to support the photovoltaic and solar panels shall be installed parallel with flat roof, slope roof or vertical wall surfaces. The distance between the rack base and the building surface should be minimized as much as possible to reduce the overall height of the final system.

For installations on flat roofs with sloped/angled solar panels, the slope of the panels should be the minimum necessary to achieve suitable efficiency to reduce the height at the top edge of the solar panel. The maximum height, including the roof racking system (base and vertical stanchions) plus the solar panel, shall not exceed 18” above the building surface. The Design Committee may accept minor deviations from these criteria for the benefit of increased efficiency.

Photovoltaic installations must be set back a minimum of 36” from the edge of the roof to allow for a perimeter walking area around the array. Arrays may be installed down to the eave if there remain three access points from the ground to the roof’s ridgeline. For ground-mounted arrays, see Section 3.11.8.

In addition, applicants should be aware of code requirements associated with labeling of solar conduits, electrical conduits and emergency disconnects.

## 3.11.5 Selection of Materials

Photovoltaic panel material selection should consider reflectivity, color, and pattern:

1. The reflectivity of products should minimize impact on adjoining and distant neighbors and may necessitate alternative material types and/or additional landscape or other screening.
2. The color of the solar panels and the racking system should be black in color or so dark as to appear black. The Design Committee may, at its discretion, deem some solar panel colors unacceptable. If the underside of the solar panels will be visible, the panel’s underside should also be black or very dark in color. The inverter should be unobtrusive (neutral) in color unless adequate visual screening is provided as described in Section 3.11.6.
3. The solar panels should have no grid pattern or other detail (*e.g.*, white diamonds) that are readily visible from off-site.

Other photovoltaic building products including solar roofing, wall screens and alternative products may be used. However, they should be used in a manner that will integrate the new materials with existing building products and respect the intent and provisions of the Design Guidelines.

## 3.11.6 Visual Screening

Visual screening or interior installation of equipment may be required in order to minimize off-site impacts. Visual screening will apply to both the installation of the photovoltaic and solar panels and any exterior mounted accessory installations including electrical panel, inverter, meter boards or battery racks. Visual screening may include landscape material or modification of existing architectural or roofing elements. Any visual screen planting should ensure that it would not block future solar access. Exterior mounted accessories should be neutral in color (not light colored) or painted to match siding depending on location; structural housing matching the background wall in some cases may be recommended to minimize off-site impacts.

### 3.11.7 Removal of Existing Landscape Materials

Location of the proposed installation must acknowledge existing tree and landscape canopy. Although removal of pre-existing landscaping and trees may improve the efficiency (or maximize solar access) of the proposed system, any such request for removal of landscaping requires Design Committee and Landscape Committee approval and may be deemed inappropriate if off-site visual impacts are adversely affected by such removal. Therefore, applicants should not rely on removal of existing landscape material as part of their proposed photovoltaic installation. At no time shall a neighboring property be expected to remove pre-existing landscape material or trees in order to increase efficiency of the proposed system. Any such landscape changes would require agreement by the neighboring property and Design Committee approval.

### 3.11.8 Setback Requirements for Ground Mounted Installations

In some cases, ground mounted installations may be deemed appropriate based upon solar access and on-site or off-site impacts. Setback requirements for any ground mounted or building mounted solar or photovoltaic system including any ancillary equipment, battery storage, and all other aspects of the installation shall abide by the existing building envelope lines established for each individual lot. In some cases, ground mounted installations may exceed the building envelope lines by making use of the Town's averaging provisions (see Section 3.3.2). However, any such encroachment beyond the building envelope line must also be within the E-1 line. No photovoltaic or solar system installation shall be allowed within any E-2 area of the property. A minimum of a 10-foot (10') perimeter of vegetation clearance must be maintained.

# *Exhibit 3.11.2—California State Code (Civil Code Section 714) CC&Rs and Solar Energy Systems*

## CIVIL CODE SECTION 714

**714.**. (a) Any covenant, restriction, or condition contained in any deed, contract, security instrument, or other instrument affecting the transfer or sale of, or any interest in, real property, and any provision of a governing document, as defined in Section 4150 or 6552, that effectively prohibits or restricts the installation or use of a solar energy system is void and unenforceable.

(b) This section does not apply to provisions that impose reasonable restrictions on solar energy systems. However, it is the policy of the state to promote and encourage the use of solar energy systems and to remove obstacles thereto. Accordingly, reasonable restrictions on a solar energy system are those restrictions that do not significantly increase the cost of the system or significantly decrease its efficiency or specified performance, or that allow for an alternative system of comparable cost, efficiency, and energy conservation benefits.

(c) (1) A solar energy system shall meet applicable health and safety standards and requirements imposed by state and local permitting authorities, consistent with Section 65850.5 of the Government Code.

(2) Solar energy systems used for heating water in single family residences and solar collectors used for heating water in commercial or swimming pool applications shall be certified by an accredited listing agency as defined in the Plumbing and Mechanical Codes.

(3) A solar energy system for producing electricity shall also meet all applicable safety and performance standards established by the California Electrical Code, the Institute of Electrical and Electronics Engineers, and accredited testing laboratories such as Underwriters Laboratories and, where applicable, rules of the Public Utilities Commission regarding safety and reliability.

(d) For the purposes of this section:

(1) (A) For solar domestic water heating systems or solar swimming pool heating systems that comply with state and federal law, "significantly" means an amount exceeding 10 percent of the cost of the system, but in no case more than one thousand dollars ($1,000), or decreasing the efficiency of the solar energy system by an amount exceeding 10 percent, as originally specified and proposed.

(B) For photovoltaic systems that comply with state and federal law, "significantly" means an amount not to exceed one thousand dollars ($1,000) over the system cost as originally specified and proposed, or a decrease in system efficiency of an amount exceeding 10 percent as originally specified and proposed.

(2) "Solar energy system" has the same meaning as defined in paragraphs (1) and (2) of subdivision (a) of Section 801.5.

(e) (1) Whenever approval is required for the installation or use of a solar energy system, the application for approval shall be processed and approved by the appropriate approving entity in the same manner as an application for approval of an architectural modification to the property, and shall not be willfully avoided or delayed.

(2) For an approving entity that is an association, as defined in Section 4080 or 6528, and that is not a public entity, both of the following shall apply:

(A) The approval or denial of an application shall be in writing.

(B) If an application is not denied in writing within 45 days from the date of receipt of the application, the application shall be deemed approved, unless that delay is the result of a reasonable request for additional information.

(f) Any entity, other than a public entity, that willfully violates this section shall be liable to the applicant or other party for actual damages occasioned thereby, and shall pay a civil penalty to the applicant or other party in an amount not to exceed one thousand dollars ($1,000).

(g) In any action to enforce compliance with this section, the prevailing party shall be awarded reasonable attorney's fees.

(h) (1) A public entity that fails to comply with this section may not receive funds from a state-sponsored grant or loan program for solar energy. A public entity shall certify its compliance with the requirements of this section when applying for funds from a state-sponsored grant or loan program.

(2) A local public entity may not exempt residents in its jurisdiction from the requirements of this section.

*(Amended by Stats. 2014, Ch. 521, Sec. 2. Effective January 1, 2015.)*

**714.1.** Notwithstanding Section 714, any association, as defined in Section 4080 or 6528, may impose reasonable provisions which:

(a) Restrict the installation of solar energy systems installed in common areas, as defined in Section 4095 or 6532, to those systems approved by the association.

(b) Require the owner of a separate interest, as defined in Section 4185 or 6564, to obtain the approval of the association for the installation of a solar energy system in a separate interest owned by another.

(c) Provide for the maintenance, repair, or replacement of roofs or other building components.

(d) Require installers of solar energy systems to indemnify or reimburse the association or its members for loss or damage caused by the installation, maintenance, or use of the solar energy system.

*(Amended (as amended by Stats. 2012, Ch. 181, Sec. 21) by Stats. Effective January 1, 2014.)*

**714.5.** The covenants, conditions, and restrictions or other management documents shall not prohibit the sale, lease, rent, or use of real property on the basis that the structure intended for occupancy on the real property is constructed in an offsite facility or factory, and subsequently moved or transported in sections or modules to the real property. Nothing herein shall preclude the governing instruments from being uniformly applied to all structures subject to the covenants, conditions, and restrictions or other management documents. This section shall apply to covenants, conditions, and restrictions or other management documents adopted on and after the effective date of this section.

*(Added by Stats. 1987, Ch. 1339, Sec. 1.)*

# *Exhibit 3.11.2—California Public Resources Code Section 25980-25986 Solar Shade Control Act of 1979*

## PUBLIC RESOURCES CODE SECTION 25980-25986

**25980.** This chapter shall be known and may be cited as the Solar Shade Control Act. It is the policy of the state to promote all feasible means of energy conservation and all feasible uses of alternative energy supply sources. In particular, the state encourages the planting and maintenance of trees and shrubs to create shading, moderate outdoor temperatures, and provide various economic and aesthetic benefits. However, there are certain situations in which the need for widespread use of alternative energy devices, such as solar collectors, requires specific and limited controls on trees and shrubs.

*(Added by Stats. 1978, Ch. 1366.)*

***25981.*** (a) As used in this chapter, "solar collector" means a fixed device, structure, or part of a device or structure, on the roof of a building, that is used primarily to transform solar energy into thermal, chemical, or electrical energy. The solar collector shall be used as part of a system that makes use of solar energy for any or all of the following purposes:

(1) Water heating.

(2) Space heating or cooling.

(3) Power generation.

(b) Notwithstanding subdivision (a), for the purpose of this chapter, "solar collector" includes a fixed device, structure, or part of a device or structure that is used primarily to transform solar energy into thermal, chemical, or electrical energy and that is installed on the ground because a solar collector cannot be installed on the roof of the building receiving the energy due to inappropriate roofing material, slope of the roof, structural shading, or orientation of the building.

(c) For the purposes of this chapter, "solar collector" does not include a solar collector that is designed and intended to offset more than the building's electricity demand.

(d) For purposes of this chapter, the location of a solar collector is required to comply with the local building and setback regulations, and to be set back not less than five feet from the property line, and not less than 10 feet above the ground. A solar collector may be less than 10 feet in height only if, in addition to the five-foot setback, the solar collector is set back three times the amount lowered.

*(Amended by Stats. 2008, Ch. 176, Sec. 1. Effective January 1, 2009.)*

**25982.** After the installation of a solar collector, a person owning or in control of another property shall not allow a tree or shrub to be placed or, if placed, to grow on that property so as to cast a shadow greater than 10 percent of the collector absorption area upon that solar collector surface at any one time between the hours of 10 a.m. and 2 p.m., local standard time.

*(Amended by Stats. 2008, Ch. 176, Sec. 2. Effective January 1, 2009.)*

***25982.1.*** (a) An owner of a building where a solar collector is proposed to be installed may provide written notice by certified mail to a person owning property that may be affected by the requirements of this chapter prior to the installation of the solar collector. If a notice is mailed, the notice shall be mailed no more than 60 days prior to installation of the solar collector and shall read as follows:

| SOLAR SHADE CONTROL NOTICE |
| --- |
| Under the Solar Shade Control Act (California Public Resources Code §25980 et seq.) a tree or shrub cannot cast a shadow greater than 10 percent of a solar collector absorption area upon that solar collector surface at any one time between the hours of 10 a.m. and 2 p.m. local standard time if the tree or shrub is placed after installation of a solar collector. The owner of the building where a solar collector is proposed to be installed is providing this written notice to persons owning property that may be affected by the requirements of the act no more than 60 days prior to the installation of a solar collector. The building owner is providing the following information: |
| Name and address of building owner: |
| Telephone number of building owner: |
| Address of building and specific location where a solar collector will be installed (including street number and name, city/county, ZIP Code, and assessor's book, page, and parcel number): |
| Installation date of solar collector: |
| _____ |
| Building Owner, Date |

(b) If the owner of the building where a solar collector is proposed to be installed provided the notice pursuant to subdivision (a), and the installation date is later than the date specified in that notice, the later date shall be specified in a subsequent notice to persons receiving the initial notice.

(c) (1) A transferor of the building where the solar collector is installed may provide a record of persons receiving the notice pursuant to subdivision (a) to a transferee of the building.

(2) A transferor receiving a notice pursuant to subdivision (a) may provide the notice to a transferee of the property.

*(Added by Stats. 2008, Ch. 176, Sec. 3. Effective January 1, 2009.)*

***25983.*** A tree or shrub that is maintained in violation of Section 25982 is a private nuisance, as defined in Section 3481 of the Civil Code, if the person who maintains or permits the tree or shrub to be maintained fails to remove or alter the tree or shrub after receiving a written notice from the owner or agent of the affected solar collector requesting compliance with the requirements of Section 25982.

*(Repealed and added by Stats. 2008, Ch. 176, Sec. 5. Effective January 1, 2009.)*

***25984.*** This chapter does not apply to any of the following:

(a) A tree or shrub planted prior to the installation of a solar collector.

(b) A tree planted, grown, or harvested on timberland as defined in Section 4526 or on land devoted to the production of commercial agricultural crops.

(c) The replacement of a tree or shrub that had been growing prior to the installation of a solar collector and that, subsequent to the installation of the solar collector, dies, or is removed for the protection of public health, safety, or the environment.

(d) A tree or shrub that is subject to a city or county ordinance.

*(Amended by Stats. 2008, Ch. 176, Sec. 6. Effective January 1, 2009.)*

***25985.*** (a) A city, or for unincorporated areas, a county, may adopt, by majority vote of the governing body, an ordinance exempting their jurisdiction from the provisions of this chapter. The adoption of the ordinance shall not be subject to the California Environmental Quality Act (commencing with Section 21000).

(b) Notwithstanding the requirements of this chapter, a city or a county ordinance specifying requirements for tree preservation or solar shade control shall govern within the jurisdiction of the city or county that adopted the ordinance.

*(Amended by Stats. 2008, Ch. 176, Sec. 7. Effective January 1, 2009.)*

***25986.*** Any person who plans a passive or natural solar heating system or cooling system or heating and cooling system which would impact on an adjacent active solar system may seek equitable relief in a court of competent jurisdiction to exempt such system from the provisions of this chapter. The court may grant such an exemption based on a finding that the passive or natural system would provide a demonstrably greater net energy savings than the active system which would be impacted.

*(Added by Stats. 1978, Ch. 1366.)*

# *Exhibit 3.11.3—Typical Photovoltaic System Components*

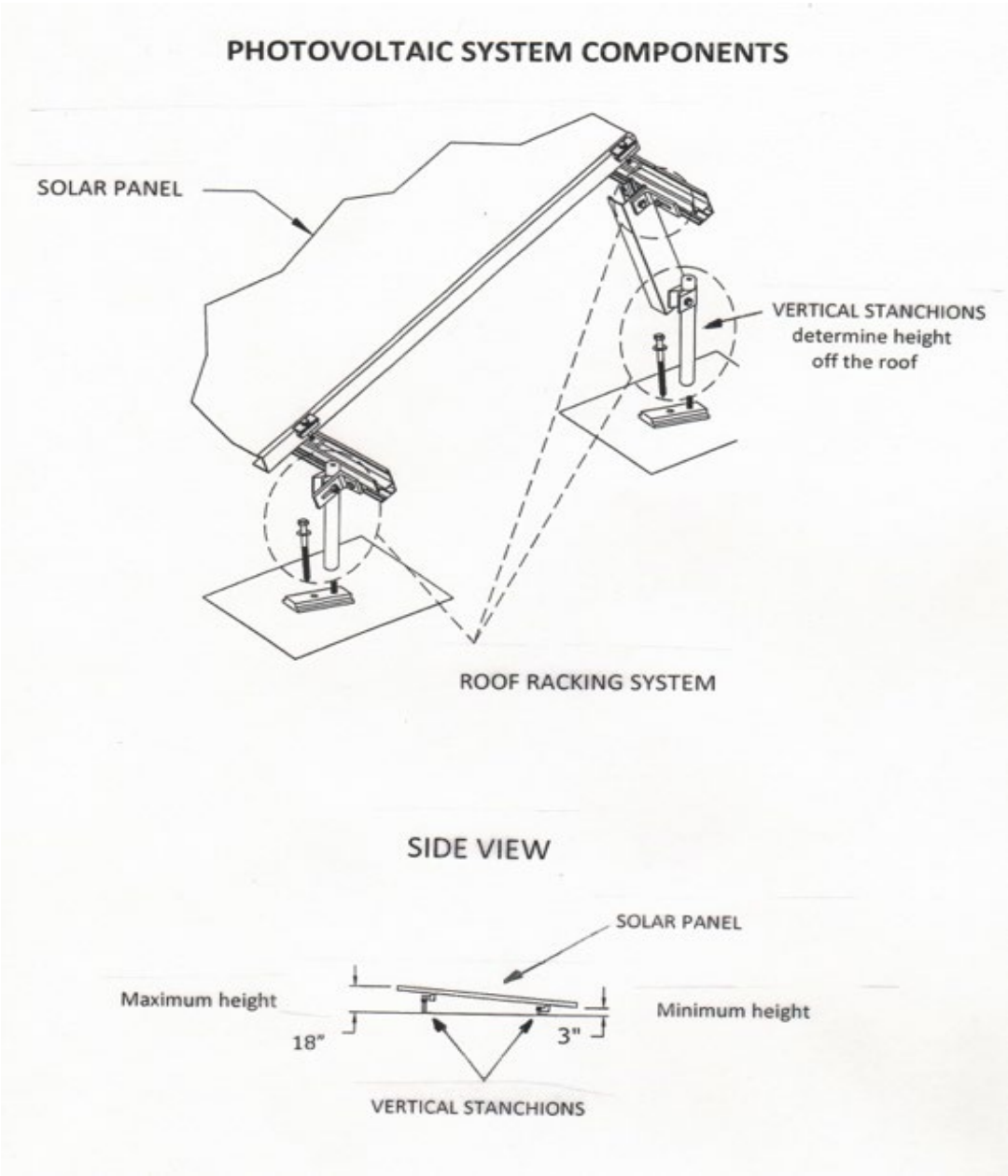

# Index of Revisions

| Date of revision | Items revised or added are in bold |
|---|---|
| 11/20/2002 | 3.4 Exterior Wall and Roof Treatments<br>Exhibit 3.5.3.3<br>**Trellis Options A,B,C,D,E** |
| 8/25/2003 | **3.11 Photovoltaic and Solar Panels** |
| 11/4/2004<br>11/8/2004 | 3.6 Auxiliary Structures<br>**3.6.9 Mailboxes**<br>**Exhibit 3.6.9 Standard Detail – Newspaper Tube** |
| 5/23/2005 | 3.1 Landscaping<br>**Exhibit 3.1.7 Mulching Guidelines** |
| 10/2005 | 3.1 Landscaping<br>**Exhibit 3.1.2 Approved Plant List** |
| 2/15/2006 | 2.3 Design Committee Rules and Process<br>Exhibit 2.3.2 Going through the Design Committee and Town Review Process<br>**Step 13: Rules for Contractors** |
| 5/23/2006 | 3.2 Exterior Colors<br>**Exhibit 3.2.11 Approved Exterior Colors** |
| 8/25/2006 | 3.1 Landscaping<br>**3.1.5.7 Preservation of Significant Views**<br>**Exhibit 3.1.5.7** |
| 9/25/2006 | 3.2 Exterior Colors<br>Exhibit 3.2.11 Approved Exterior Colors<br>**Treating Wood Shingles** |
| 10/2/2006 | 2.2 Design Application and Review Process<br>**Exhibit 2.2 Application for Approval of Proposed Improvements** |
| 1/5/2007 | **Glossary** |
| 1/5/2007 | 1.0 Purpose, Basis, Scope, Modification and Enforcement of Design Guidelines<br>**1.7.4 Enforcement of the Design Guidelines** |
| 1/5/2007 | 2.0 Design Application Review Process<br>**2.3 Design Committee Procedures**<br>**2.3.3 Design Committee Approval or Denial**<br>**2.4 Notifications** |
| 5/15/2007 | 3.2 Exterior Colors<br>Exhibit 3.2.11 Approved Exterior Colors<br>**Roofing Shingle Index** |
| 9/17/2007 | 3.1 Landscaping<br>**3.1.5.4 Redwood Trees** |
| 9/17/2007 | 3.2 Exterior Colors<br>**3.2.4.2 Deck Colors** |

| | |
|---|---|
| 9/17/2007 | 3.3 House Additions and Increasing Footprints<br>**3.3.2.2 Restricted Application of Town Averaging Provision**<br>**Exhibit 3.3.2.2 C Implementation of 32 Foot Rule** |
| 9/17/2007 | 3.5.Decks & Patios and Related Railings and Trellises<br>**3.5.2.1 Deck and Patio Surfaces**<br>**3.5.4.1 Deck and Patio Structure Materials**<br>**3.5.4.3 Deck Railings**<br>**Exhibit 3.5.2.3 Standard Details** |
| 9/17/2007 | 3.9 Exterior Lighting<br>**3.9.1 Concept Statement**<br>**3.9.2 General Design Concept**<br>**3.9.3 Lighting Entrance Walkways and Carports**<br>**3.9.4 Permitted Light Fixtures**<br>**3.9.4.1 Original Fixtures**<br>**3.9.4.2 Newly Approved Fixtures**<br>**3.9.5 Approvals Required** |
| 10/20/2008 | 2.0 Design Application and Review Process<br>**Exhibit 2.3.2, Step 13: Rules for Contractors** |
| 4/20/2009 | 2.0 Design Application and Review Process<br>**Exhibit 2.2 Application for Approval of Proposed Improvements** |
| 2/10/2010 | 2.0 Design Application and Review Process<br>**Exhibit 2.3.2, Step 13: Rules for Contractors.** (noise ordinance) |
| 5/1/2011 | 3.1 Landscaping<br>**Major content revision** |
| 5/2/2011 | **Reformatting of entire document** |
| 11/21/2011 | Minor **edits** and **addition of new**, Board approved versions of **Fee Schedule and applications** |
| 1/18/2012 | Minor **formatting improvements/corrections** to pages 18 and 149 |
| 5/22/2014 | **Exhibit 2.2 Application for Approval of Proposed Improvements**<br>**Exhibit 2.3.2, Step 13: Rules for Contractors**<br>**3.2.7.3 Skylight Colors**<br>**3.4.2.7 Skylights**<br>**3.6.10 Signs**<br>**3.11 Photovoltaic and Solar Panels** |
| 6/2014 | **3.6.5.1 A/C** decibel clarification of wording |
| 8/2014 | **Exhibit 2.2 Acknowledgements**<br>**Clarification of wording to landscaping sections** throughout |
| 8/2016 | **Major content revision of entire document**<br>A red-lined version with all changes can be found in the "DC Governance and Application Forms" section of the Design Committee folder on the Ranch Office drive. |
| 3/7/17 | **Minor changes to solar panel restrictions due to changes in civil code** |
| 10/13/17 | **Minor correction to inconsistency in guidelines regarding skylight color** |

| | |
|---|---|
| 10/24/19 | **Major content revision of entire document**<br>A red-lined version with all changes can be found in the "DC Governance and Application Forms" section of the Office Staff Google Drive Design Committee folder |
| 11/18/20 | **Major content revision aimed at increasing fire safety**<br>A summary of changes can be found in the "DC Governance and Application Forms" section of the Office Staff Google Drive Design Committee folder |
| 4/21/21 | **3.2.3 Guide to Approvable Materials**—glass reflectivity requirement removed<br>**3.9.3 General Guidelines (applicable to all exterior lighting)**—language surrounding lighting controls made to parallel the town's<br>**1.3.1 Maintaining Design Concept**—language added to clarify criteria around privacy and views |
| 9/25/24 | **Major content revision of entire document**<br>A red-lined version with all changes can be found in the "DC Governance and Application Forms" section of the Office Staff Google Drive Design Committee folder |
| 5/21/25 | **3.3.2.1 Building Envelopes –** Clarification of term "non-living line" and Building Envelope encroachment exceptions<br>**3.3.2.2 Restricted Application of Town Averaging provision** – Clarification that no restrictions on the averaging provision will be applied if required by law.<br>**3.6.3 Garbage Can Enclosures** – The proposed revisions are in response to guidance from Woodside Fire that garbage cans should fully enclosed if in the 0-5' zone of a structure due to the risk of ignition from embers. |